MAGNET-APPLIED EQUIPMENT

GENERAL CATALOG

PRODUCTS GUIDE

Vol.9

KANETEC

http://www.kanetec.co.jp

CONTENTS MAGNET-APPLED EQUIPMENT [GENERAL CATALOG]

P001 RECTANGULAR

P003 GRINDING — Surface grinder, belt grinder, mold grinder

Electromagnetic	Permanent magnetic	Permanent electromagnetic
KET 3	RMAW 6	EPT/EPT-LW 9
KETW-N 4	RMWH 6	EPT-H 9
KESL 4	RMWH-J 7	EPTW 10
KCT/LCU 5	RMWH-X 7	EPTW-N 10
	RTH 8	EP-DWM 10
	RMWH-A-H 8	
	RMWH-2F 8	

P011 CUTTING — Milling machine, machining center

Electromagnetic	Permanent magnetic	Permanent electromagnetic
KETN 11	RMA 13	EP-Q 15
KETZ 12	RMT 13	KT-Q 16
KEZX 12	RMT-J 14	EP-D 17
	RMA-V 14	EP-QD 17
	RMT-V 14	EP-QS3 18

P019 ROUND TYPE

P019 GRINDING — Rotary grinder, cylindrical grinder

Electromagnetic	Permanent magnetic	Permanent electromagnetic
SR 19	RMAW-C 22	EPC-ARF 23
BH 19	RMCW 22	
KEC-AR 21	RMCB 22	
KCC-AR 21		

P023 TURNING & CUTTING — Lathe, turning machine, compound lathe

Electromagnetic	Permanent magnetic	Permanent electromagnetic
KEC-AS 23	RMA-C 24	EPC-Z 25
	RMC 24	EPC-AST 26
	RMC-X 25	EP-DR 26

P027 COMPOSITE FUNCTIONS

P029 ACSHIM® (Straightening) — Automation, high efficiency

Electromagnetic	Permanent magnetic	Control unit
KEZF-WS-A 29	EPZF-WX 31	EH-VFWK 29
KEZF-G 30		EH-VFW 30
KEZF-WX 30		EPS-WF 31

P032 AIRUP (Pneumatic floating)

Electromagnetic	Control unit	
KETB 32	ES-VB 32	

P033 Chucks for Nonferrous and Weak Magnetic Materials

P035 VACUUM HOLDING

Vacuum		Vacuum system
KVR-AV 35	KVR-GVW 37	VPU 38
VPU-E-AV 35	KVR-G 37	VPU-EG 38
KVR 36		VPU-OV 38

P039 HYBRID

Electromagnetic	Permanent electromagnetic	
KETV 39	EP-DV 39	

P040 CEMENTED CARBIDE

Permanent magnetic		
CMR 40	CMR-H 40	CMR-DL 40

P041 FIXING AGENT

PROMELTA	Control unit	
PRB 41	PRC 41	

P042 SPECIALIZED FUNCTIONS

P043 VERTICAL TYPE

Permanent magnetic		
SKM 43	SKAW 43	

P044 TILT TYPE

Permanent magnetic		
RMT-ED 44	RMWH-ED 44	RMC-ED 44

P045 ELECTRIC DISCHARGE & USE IN LIQUID

Electromagnetic	Permanent magnetic	Permanent electromagnetic
KET-U 45	RMT-U 46	EP-DM-U 47
KCT-U 45	RMA-U 47	EPZ-U 47
KEZ-H 45		
KET-UTS 46		

P048 SINE BAR

Electromagnetic	Permanent magnetic	Permanent electromagnetic
SBE-U 49	SBP-R・UR 49	SBEP-U 51
SBC-U 49	SBP-R・LS 50	
	SBP-R・S 50	
	SBP-R・L 50	
	SBP-R 51	
	SBP-R・L(ミニ) 51	

P052 5-FACE MACHINING

Electromagnetic	Permanent electromagnetic	
RMA-2F 52	EPB 52	EPB-2F 52

P053 LONG WORKPIECE

Permanent electromagnetic		
EP-QL 53	EP-QZ 53	

KANETEC Website
KANENTEC's website http://www.kanetec.co.jp contains frequently asked questions and answers. They are intended for customers who are currently using or plan to use KANETEC products so that they know correct and effective methods of using our products.

P054 ELECTRICAL COMPONENTS

Selection Guide ····· 54

Electromagnetic	Permanent electromagnetic	Switch Terminal Box
EH-V····· 55	EPS-P····· 56	S-2A····· 58
ES-M····· 55	EPS-D····· 56	TB····· 58
EST-1····· 55	EPS,-W,-GW··· 57	
ES-V····· 56	EPH-LW····· 57	
KR····· 56		

Trouble? ····· 58

P059 AUXILIARY TOOLS & HOLDING TOOLS

P061 HOLDING TOOLS

One-face holding	Multi-face holding	Additional working allowed
MMZ····· 61	RMAW-2F····· 61	KM-JB····· 63
MMC····· 61	KPB····· 62	MM····· 63
	MMW····· 62	
	MMXW····· 62	

Marking & measurement tool holding	Holding assist	Wire protection for electric discharge machining
KYA····· 64	KT· KTV····· 67	MP····· 68
KYB····· 64	MV····· 68	
KVA····· 65		
KVA-2F····· 65		
KVS····· 66		
KMV····· 66		
KMV-M····· 67		

Nonmagnetic material securing	Cutting oil & air supply	Grindstone dressing
YS····· 68	NH····· 69	MDR····· 69

P070 MEASUREMENT HOLDING TOOLS

Magnetic base	Stage	Sensor mounting
MB-P/MB··· 70	MB-L-A····· 75	SMB····· 76
MB····· 71	MB-L-CA····· 75	
DG····· 72		
MB-MX····· 73		
MB-X····· 73		
MB-OX····· 74		
MB-A2····· 74		
MB-2FPG····· 74		

Boring arbor	Visual aid	Stone surface plate
MB-BRB····· 76	MR····· 77	GB-MX····· 77
MB-S····· 76		

P078 MEASUREMENT AUXILIARY TOOLS

Plumb bob	Straight edge	Square
FS····· 78	SE····· 78	SK····· 78

P079 WORK HOLDING TOOLS

Clamp	Support jig	Securing holder
MPV····· 79	KRS····· 80	KM····· 81
MPV-MF····· 79		KM-T-T····· 83
MPV-CL····· 79		WK····· 83
MPV-F····· 79		KOK····· 84

Cable handling & hanger		
KM-RB····· 84	KM-RT····· 84	KOC····· 84

P085 ILLUMINATION

100V power source		Battery use
ME-LED····· 85	ME-5RA····· 86	ME-BW····· 86
ME-3KJ····· 85	ME-5RA-LED··· 86	

P087 LIFTING MAGNETS

P089 TRANSPORTATION OF STEEL MATERIALS AND MAGNETIC WORKPIECES

Permanent magnetic	Electromagnetic	Permanent electromagnetic
LPR-VN····· 89	LMU····· 94	LEP····· 96
LPH····· 90	LMU-UW····· 94	LEP-Q····· 96
LPR-VN-WP··· 91	LMU-SR····· 95	LEP-QV····· 97
LPH-WP····· 91	LM····· 95	
LPR-VN+L····· 91	LM-X····· 96	
LB-PR····· 92		
PL····· 93		
LM-P····· 93		
※ ON/OFF by air cylinder		

Control unit	Battery	Large size
KR-A KR-P··· 97	LME-F····· 99	LM-EC····· 103
LBB····· 97	LME-FRJ-A··· 100	LM-R····· 103
RH-MW····· 97	LME-ELJ-A··· 100	LM-EP····· 104
LEPH····· 98	LME-V····· 101	LEP-QL····· 104
LEPR-P····· 98	LME-M····· 102	**Material handling auxiliary tools**
	LME-T····· 102	HMP····· 105
		SL····· 105
		HL····· 105

P106 TRANSPORTATION OF NONMAGNETIC WORKPIECES

Vacuum suction	
LVA····· 106	
LVA-RCT-VLP····· 106	

P107 ELECTROMAGNETIC HOLDERS

P108 ELECTROMAGNETIC HOLDERS

Electromagnetic	Permanent electromagnetic	Control unit
KE-B····· 108	KEP····· 111	RH-M····· 112
KE-D · E····· 109	KE-H····· 111	RH-H····· 113
KE-R····· 109	(Hybrid)	KR····· 113
KE-K····· 110		
KE-V····· 110		
KE-M····· 110		

CONTENTS MAGNET-APPLED EQUIPMENT [GENERAL CATALOG]

P114 MAGNETIC EQUIPMENT FOR CONVEYANCE

P115 MAGNETIC EQUIPMENT FOR CONVEYANCE

Steel pipe & steel material	Belt conveyance support	Other
KPR-A 115 KPR 115 (Thin steel sheet) KER 115 (Conveyance)	KRA 116	PME 117

P118 CONVEYANCE & ENVIRONMENTAL EQUIPMENT

P119 MACHINING FLUID PURIFICATION

Sludge & chip collection		Filtration
MS-F,FH,FHP 119 MS optional 120 MS-BS 120	CMS 120 FMS 121	HS 123

P122 CHIP CONVEYANCE

Plate	Chip conveyance	
KPMF/KPMT 122 KPMF-C 123 KPM-BW 123 PF-1A 123	MCO 124 MCOL 124	KSC-W 125 KSCT-W 126 KSCL 126
Small type		
KGM/KGM-VM 127 KGM-H 127 KGM-T 127 KGM-S 127	KGM 128 (Rectangular grid type magnetic bar unit) KGM-H 128 (Powerful rectangular grid type magnetic bar unit)	KGM-C 128 KGM-HC 128

P121 Separation, Sorting & Collection

Oil film collection	Barrel polishing	
OC 122	KBS 124	

P129 DEMAGNETIZERS & MAGNETIZER

P131 DEMAGNETIZERS

Table type	Stationary type	Tunnel type
KMD 131 KMDM 131 KMD-K 131 KMDY 132 KMDS 132 KMD-F,EHD 132	KMDE 133 KMDE-MP 133 KMDE-V,EHD-W 134	KMDT 134 KMDTR 134 KMDTC 135
Special shape	**Hand-held work**	**Capacitor system**
KMDV 135 KMDU 135	KMDP 136 KMDH 136 KMDH-P 136 KMDC 136	KRMDC,KRMD 137

P137 MAGNETIZER

Magnetic field generator
MFG 137

P138 TOOLS & EQUIPMENT

P139 MAGNETIC TOOLS

Cleaning		Iron plate separation
HMC 139 HMB 139 HMW 140 HM 140	K 140 RS 141 S 141	KF 142 KF-T 142 KF-S 142 KF-HC 143 KF-Q 143
Welding & assembly		
WK 144 KM-B 144 KM-W 144 KM-SA 145	KM-S 145 KM-TH 146 KM-TA 146 GS 147	HL-E 147 WKS 147

P148 BORING & TAPPING EQUIPMENT

Boring	Tapping	
KCD-M 148 KCD-N 148	MTP 148	

P149 INDUSTRIAL WASTE DISPOSAL & RESOURCE CIRCULATION

P153 RECYCLING & GARBAGE DISPOSAL

Nonferrous metal separation	Aluminum can collection	Iron piece & iron lump(Suspension)
BMR 153	MES-J 154	BST 155 BST-N 155 BSTR 156 SPM 156 HEM-C 157 HEM-BS 157
Iron piece & iron lump (Drum)	**Magnetic fine powder**	
KDS 148 KPDL 148	KHDS 148	

Plate	Drum type	Pulley type
KPMD 160 KPMJ 160 KPM 160 PF-F/HF 161	KPD 161	KER 162 KPR 162

P163 REMOVAL OF FOREIGN OBJECTS IN FOOD AND MEDICINE

P165 REMOVAL OF FOREIGN OBJECTS IN FOOD AND MEDICINE

Magnetic bars	Grid type	For liquid
PCMB 165 PCMB-J 166 PCMBD-A 167 PCMB-S 167 PCMB-K 167	PCMG 168 PCMG-C 169	PCMH 171 PCMH2-E 171 PCMH2-D-A 172 PCMH2-TD-A PCMH2-D-B 172 PCMH4 172 PCML 173 PCMS 173 PCMY 173

KANETEC Website
KANENTEC's website **http://www.kanetec.co.jp** contains frequently asked questions and answers. They are intended for customers who are currently using or plan to use KANETEC products so that they know correct and effective methods of using our products.

Pipe	For molding machine	Plate
PCMP·····174	PCML-S·····174	PCMN·····175 PCMN-HU···175 PCMN-TF···175
Drum type	**Pulley type**	**Opposing-pole type**
PCMD·····176	PCMR·····176	PCMI·····176

P177 MAGNETISM MEASUREMENT

P179 MAGNETISM CHECK

Tesla meter	Reference magnetic field	Polarity check
TM-901·····179 TM-PRB·····180 TM-AXL·····180	TM-SMF·····180 TM-AMF·····180	PC·····180

P177 MAGNETIC MATERIALS

P179 MAGNETIC MATERIALS

No.1 RUBBER MAGNET SHEET·····181
No.2 FERRITE MAGNET·····181
No.3 ALNICO MAGNET·····182
No.4 RARE EARTH MAGNET·····182
No.5 SIMPLE MAGNETIC HOLDER·····182

Precautions for handling

The products listed in this catalog have been designed and manufactured in compliance with the Product Liability Law in Japan. However, prior to using the products, be sure to read and understand the "warnings" shown on the products or their packaging boxes or their operation manuals and heed such warning strictly.
The products have been designed on the condition that they are used indoor at normal temperature and normal humidity except for the products of special specifications such as the heat-resistant and waterproof construction.
Please note that should the products fail due to overhaul or rough handling by the customer or use for purposes other than the intended purposes, Kanetec shall not be held liable for repair or recovery.

Indicated dimensions

The indicated dimensions are approx. dimensions or standard dimensions and the dimensional tolerance varies depending on products. If you require detailed dimensions, please contact us. Please note that the dimensions of products may be changed for quality improvement or other reasons. In particular, when you plan to create a new installation space, please study the dimensions carefully.

Colors of products

The photos of products listed in this catalog have been printed with careful attention and advanced technology, but they may look slightly different from actual ones due to properties of printing ink.

Effects on Human Health

KANETEC's products use permanent magnets and electromagnets. A person using electronic medical equipment such as a cardiac pacemaker must not come close to or in contact with these products since they may cause such equipment to malfunction.
Note that when the work is over, magnetism may remain on the attractive face or in workpieces. Exercise caution.

An inspection report and calibration certificate of the products are available (for a fee) upon request. Please contact Sales Dept., Kanetec Co., Ltd.
KANETEC will also create a "Parameter Sheet" covered by the Export Trade Control Order in Japan and "EAR Sheet." Please request one from the Kanetec website.

RECTANGULAR MAGNETIC CHUCKS P1
ROUND MAGNETIC CHUCKS P19
COMPOSITE FUNCTIONS P27
CHUCKS FOR NONFERROUS AND WEAK MAGNETIC MATERIALS P33
SPECIALIZED FUNCTIONS P42
CONTROL UNITS P54
AUXILIARY TOOLS & HOLDING TOOLS P59
LIFTING MAGNETS P87
ELECTROMAGNETIC HOLDERS P107
MAGNETIC EQUIPMENT FOR CONVEYANCE P114
CONVEYANCE & ENVIRONMENTAL EQUIPMENT P118
DEMAGNETIZERS & MAGNETIZER P129
TOOLS & EQUIPMENT P138
INDUSTRIAL WASTE DISPOSAL &RESOURCE CIRCULATION P149
REMOVAL OF FOREIGN OBJECTS IN FOOD AND MEDICINE P163
MAGNETISM MEASUREMENT P177
MAGNETIC MATERIALS P181

RECTANGULAR MAGNETIC CHUCKS

RECTANGULAR

P003 GRINDING Surface grinder, belt grinder, mold grinder

Electromagnetic	Permanent magnetic	Permanent electromagnetic
KET……3	RMAW……6	EPT/EPT-LW…9
KETW-N……4	RMWH……6	EPT-H……9
KESL……4	RMWH-J……7	EPTW……10
KCT/LCU……5	RMWH-X……7	EPTW-N……10
	RTH……8	EP-DWM……10
	RMWH-A-H……8	
	RMWH-2F……8	

P011 CUTTING Milling machine, machining center

Electromagnetic	Permanent magnetic	Permanent electromagnetic
KETN……11	RMA……13	EP-Q……15
KETZ……12	RMT……13	KT-Q……16
KEZX……12	RMT-J……14	EP-D……17
	RMA-V……14	EP-QD……17
	RMT-V……14	EP-QS3……18

Overview of Rectangular Magnetic Chucks

What are magnetic chucks?

Magnetic chucks are auxiliary tools mounted on machine tools and there are many types designed according to specifications of machines and applications. Magnetic chucks are indispensable tools for grinding, cutting, various precision machining, electric discharge machining and nonferrous metal machining.
Since magnetic chucks attract and hold workpieces by means of magnetic force, they are capable of holding workpieces that are difficult to hold with mechanical clamps.

Major applications of rectangular magnetic chucks

Rectangular magnetic chucks are mainly used to hold workpieces on milling machines, grinding machines, machining centers and so on.
Since magnetic chucks use magnetic force to hold workpieces, they are capable of holding workpieces without deformation and floating of workpieces which are usually caused when clamps are used to mechanically hold down workpieces on their top surface or sides. Further, they do not require much time for setting up.
For this reason, they contribute to the improvement of productivity as the machine utilization rate improves in such applications as plate machining and highly precise grinding.

Holding power of magnetic chucks

The holding power varies largely depending on the types of magnetic chucks and material, thickness and attractive face area of workpieces and distribution of mass and surface roughness of the attractive face of workpieces. The following graphs show typical examples; you can refer to them for tendency. Please note, however, that values differ slightly among chucks. Always locate workpieces in such a manner that the holding area is positioned over both the N and S poles.

Selection of grinding fluid

The separator part of the chuck work face is made of brass, resin, etc. Select grinding fluid that does not corrode these materials. For more information, please consult with grinding fluid suppliers.

An example of holding power <<Permanent electromagnetic chuck>> (1N≒0.1kgf)

●Relation between thickness of workpiece and holding power

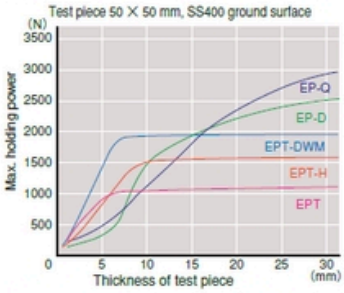

An example of holding power <<Electromagnetic chuck>> (1N≒0.1kgf)

●Relation between attractive area of workpiece and holding power

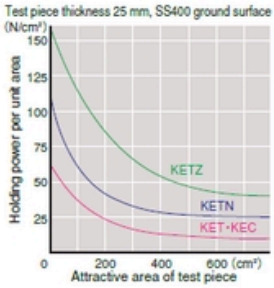

●Relation between thickness of workpiece and holding power

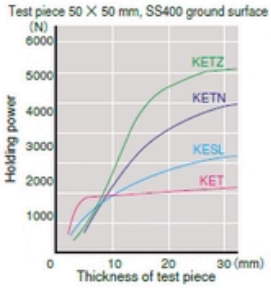

An example of holding power <<Permanent magnetic chuck>> (1N≒0.1kgf)

●Relation between thickness of workpiece and holding power

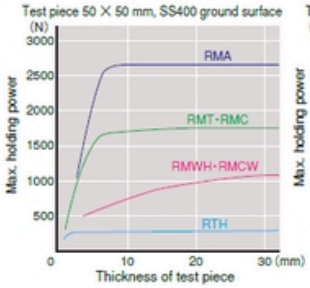

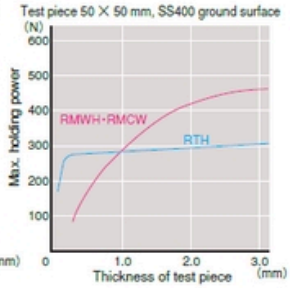

Relation between material and holding power <<Chucks in general>>

●Difference in holding power due to materials (%)

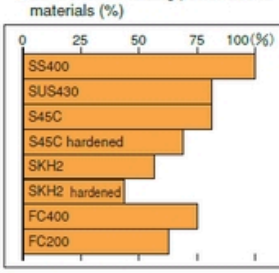

●Difference in holding power due to attractive surface roughness (%)

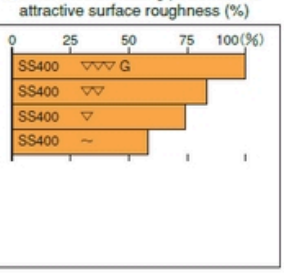

1 ※The holding power data shows reference values of typical models and does not indicate guaranteed values.

The reason why KANETEC's rectangular magnetic chucks are chosen.

■ Accumulated data of R & D of the magnetic pole structure

Magnetic chucks are auxiliary tools mounted on machine tools and there are many types designed according to specifications of machines and applications.
Magnetic chucks are indispensable tools for grinding, cutting, various precision machining, electric discharge machining and nonferrous metal machining.
Since magnetic chucks attract and hold workpieces by means of magnetic force, they are capable of holding workpieces that are difficult to hold with mechanical clamps.

■ Fabrication of special products according to usage environment

Rectangular magnetic chucks are mainly used to hold workpieces on milling machines, grinding machines, machining centers and so on.
Since magnetic chucks use magnetic force to hold workpieces, they are capable of holding workpieces without deformation and floating of workpieces which are usually caused when clamps are used to mechanically hold down workpieces on their top surface or sides. Further, they do not require much time for setting up.
For this reason, they contribute to the improvement of productivity as the machine utilization rate improves in such applications as plate machining and highly precise grinding.

■ Standards

The quality standards of electromagnetic chucks have been established as described in the right-side table for dimensional accuracy (flatness/parallelism), holding power, electrical performance (withstand voltage/insulation resistance/temperature rise limit) and water resistance including testing methods.

Environmentally friendly

These magnetic chucks employ special resin for bonding attractive face structural members, instead of solder that is normally used, but is an environmentally hazardous substance.

Standards of electromagnetic chucks

Diameter or length of face plate	Up to 300	Over 300 up to 600	Over 600 up to 900	Over 900	Surface roughness: 6.3S Mounting face: Not convex
Flatness	0.01	0.015	0.02	0.025	
Parallelism	0.02	0.03	0.04	0.05	
Holding power	The holding power on the chuck face plate must be 98.1 N (10 kgf) or over on average and 49 N (5 kgf) or over in the weakest area.				
Withstand voltage	Dielectric breakdown between the charged part and the body is not allowed. (1500 VAC, 1 min.)				
Insulation resistance	The insulation resistance must be 5 ΩM or over. (Measured with 500 V insulation resistance tester)				
Temperature rise	The temperature rise on the chuck work face must be below 15°C. (Powered on for 3 hours)				
Water resistance	When a chuck is immersed in water, no water must enter the inside or its insulation resistance must not drop.				

Note: The standards for the holding power and temperature rise vary depending on models.

Topics

Consultation An example of Model EP-Q special fabrication

We are going to use a magnetic chuck for the first time...

An inquiry from a customer who has no experience of using magnetic chucks.
We asked "may we visit you and explain in person," and the customer willingly accepted our proposal. We visited the customer and presented our explanation in detail starting from the basic point "what are magnetic chucks." When the customer understood magnetic chucks sufficiently, we listened to their worries.

Overview of workpiece and machining

- Workpiece: Material SS400, thickness 10 – 15 mm, width & length 100 – 200 mm
- Machining: Milling (machining the convex shape), precision milling (flatness/parallelism to be 0.05 mm max.), making through holes in several places in the following process

Customer's worries

- We use vices and original jigs, but setup and setup change take much time.
- Since workpieces are not square, we must be very careful when selecting clamp faces.
- We carefully adjust the power of pressing vices, but we are worried about accuracy fluctuation.

Proposal from KANETEC

We proposed the demagnetizing function-equipped permanent electromagnetic chuck for cutting EP-QD as a base for special fabrication and use of optional blocks together.
When the block directly below the through hole drilling part is removed in advance, it is possible to complete drilling of through holes in the next process by one-chucking action.
We asked the customer to perform test machining on a demonstration machine.

Results of test

- The setup time was shortened to more than a half of the time required when vices were used.
- The machining accuracy, which in the past had been around 0.03 mm, was improved to 0.007 to 0.01 mm.
- It was necessary to slow down the machining speed slightly than when vices were used.

Conclusion

The machining processes were consolidated by one chucking, the machining accuracy was improved and the setup time was shortened.
We received a high evaluation "Overall, very nice products" and the customer decided to adopt two sets of specially fabricated chucks.

A lineup of standard products starts on the next page.

※Please also use the Facsimile and Email Communication Forms at the end.

Model KET STANDARD RECTANGULAR ELECTROMAGNETIC CHUCK

Grinding

Environmentally friendly

KET-3060F

Chuck controller required additionally

[Application]
Most widely used electromagnetic chucks for grinding operations.

[Features]

■High rigidity, high reliability and high accuracy!

KANETEC' s original machining technology is used to realize a lavish body-to-case one piece hollow construction, instead of a welded construction, to enhance the rigidity, minimize secular change and improve accuracy of the chucks.

■KANETEC's original light weight design!

The chuck weight has been reduced as much as possible in consideration of driving the table of grinders. This design helps contribute to a longer service life of grinders.

■Simple thin type yet strong holding power!

The chucks have been designed as low as possible to increase a workpiece mounting space on the grinder. The overall height is as short as 70 mm to 80 mm for small and medium types and 85 mm for large types, thus various types of workpieces can be held. Though thin, KANETEC' s original design to secure an electromagnetic coil space ensures strong holding power.

■Resin-bonded structural face plate having little environmental burden employed!

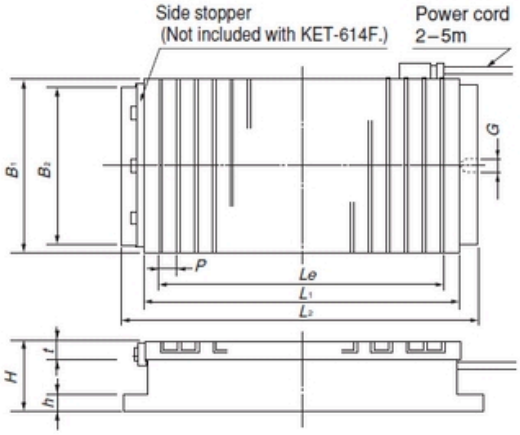

[mm (in)]

Model	Nominal Size	Work Face				Pole Pitch	Mounting Face			Height	Mounting Hole	Voltage	Current	Power Cord	Mass	Electro Chuck Master	Remarks
		B_1	L_1	t	Le	P	B_2	L_2	h	H_1	G						
KET- 614F	60(2.36)× 140(5.51)	63(2.48)	140(5.51)	13 (0.51)	106(4.17)	8(2+6) (0.31)	60(2.36)	170(6.69)	12(0.47)	67 (2.63)	8	90 VDC	0.12A	2m(78.7)	3.9kg/ 7 lb	※ES-M103C ES-M305C EH-V305B EH-VE305B	※For types with a combination of a rectifier and demagnetizer, see pages of "Chuck Controllers." P54—P58
KET- 1025F	100(3.93)× 250(9.84)	100(3.93)	250(9.84)	20 (0.78)	211(8.30)	11(2+9) (0.43)	96(3.78)	294(11.5)	18(0.70)	70 (2.75)	10		0.16A		12kg/ 26 lb		
KET- 1325F	125(4.92)× 250(9.84)	125(4.92)			212(8.34)	14(2+12) (0.55)	119(4.68)				14		0.19A		15kg/ 33 lb		
KET- 1530F	150(5.90)× 300(11.8)	150(5.90)	300(11.8)		240(9.44)		144(5.66)	344(13.5)					0.20A		21kg/ 46 lb		
KET- 1535F	150(5.90)× 350(13.7)		350(13.7)		296(11.6)			394(15.5)					0.22A		25kg/ 55 lb		
KET- 1545F	150(5.90)× 450(17.7)		450(17.7)		408(16.0)			494(19.4)					0.29A		32kg/ 70 lb		
KET- 2040F	200(7.87)× 400(15.7)	200(7.87)	400(15.7)		352(13.8)		194(7.63)	444(17.4)					0.43A		38kg/ 83 lb		
KET- 2050F	200(7.87)× 500(19.6)		500(19.6)		464(18.2)			544(21.4)					0.34A	3m(118)	47kg/ 103 lb		
KET- 2060F	200(7.87)× 600(23.6)		600(23.6)		548(21.5)			600(23.6)			Clamping (no hole)		0.47A		57kg/ 125 lb		
KET- 2550F	250(9.84)× 500(19.6)	250(9.84)	500(19.6)	25 (0.98)	451(17.7)	19.5(2.5+17) (0.76)	240(9.44)	500(19.6)	20(0.78)	80 (3.15)			0.56A		67kg/ 147 lb		
KET- 2560F	250(9.84)× 600(23.6)		600(23.6)		529(20.8)			600(23.6)					0.72A		80kg/ 176 lb		
KET- 3050F	300(11.8)× 500(19.6)	300(11.8)	500(19.6)		451(17.7)		290(11.4)	500(19.6)					0.68A				
KET- 3060F	300(11.8)× 600(23.6)		600(23.6)		529(20.8)			600(23.6)					1.06A		94kg/ 207 lb		
KET- 3090F	300(11.8)× 900(35.4)		900(35.4)		841(33.1)			900(35.4)					1.22A	5m(196)	145kg/ 319 lb		
KET- 4050F	400(15.7)× 500(19.6)	400(15.7)	500(19.6)		451(17.7)		390(15.3)	500(19.6)		85 (3.34)			0.96A	3m(118)	114kg/ 251 lb		
KET- 4060F	400(15.7)× 600(23.6)		600(23.6)		529(20.8)			600(23.6)					1.09A		137kg/ 302 lb		
KET- 4080F	400(15.7)× 800(31.5)		800(31.5)		724(28.5)			800(31.5)					1.42A	5m(196)	182kg/ 401 lb		
KET-40100F	400(15.7)×1000(39.4)		1000(39.4)		958(37.7)			1000(39.4)					1.74A		228kg/ 502 lb		
KET- 5050F	500(19.6)× 500(19.6)	500(19.6)	500(19.6)		451(17.7)		490(19.2)	500(19.6)					0.93A	3m(118)	142kg/ 313 lb		
KET- 5060F	500(19.6)× 600(23.6)		600(23.6)		529(20.8)			600(23.6)					1.06A		171kg/ 377 lb		
KET- 5065F	500(19.6)× 650(25.5)		650(25.5)		607(23.9)			650(25.5)					1.30A		185kg/ 407 lb		
KET-50100F	500(19.6)×1000(39.4)		1000(39.4)		958(37.7)			1000(39.4)					1.71A	5m(196)	285kg/ 628 lb		
KET- 6060F	600(23.6)× 600(23.6)	600(23.6)	600(23.6)		529(20.8)		590(23.2)	600(23.6)					1.48A	3m(118)	205kg/ 451 lb		
KET-60100F	600(23.6)×1000(39.4)		1000(39.4)		958(37.7)			1000(39.4)					3.10A	5m(196)	342kg/ 754 lb	Above models except for the one marked by ※.	
KET- 7075F	700(27.5)× 750(29.5)	700(27.5)	750(29.5)		685(26.9)		690(27.1)	750(29.5)					2.87A	3m(118)	299kg/ 659 lb		
KET-80100F	800(31.5)×1000(39.4)	800(31.5)	1000(39.4)		958(37.7)		790(31.1)	1000(39.4)					4.23A	5m(196)	456kg/1005 lb		

※If the magnetic force needs not be adjusted, use ES-M. ※The chuck controller and clamp parts are not included. The KANETEC chucks work best when a KANETEC chuck controller is used.
※Except for KET-614F, only the side stopper is included. (The back stopper is not included.) ※Chucks for electric discharge machining are also available. Please contact us. (Model KET-ED)

Model KETW-N ELECTROMAGNETIC MICROPITCH CHUCK

Grinding Cutting Environmentally friendly

KETW-N1530

Chuck controller required additionally

[Application]
Suitable for grinding and cutting of thin workpieces. However, workpieces should have an attractive face longer than 80 mm in the longitudinal direction.

[Features]
- In addition to grinding of thin workpieces that meet the above conditions, this model is also suitable for cutting.
- A resin-bonded structural face plate having little environmental burden is employed.

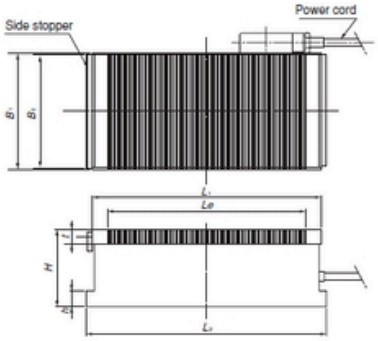

〈Information〉
For small and thin workpieces, the permanent magnetic micropitch chuck is recommended. See Model RMWH.

[mm (in)]

Model	Nominal Size	Work Face B_1	Work Face L_1	Work Face t	Work Face Le	Pole Pitch	Mounting Face B_2	Mounting Face L_2	Mounting Face h	Height H	Mounting Hole	Voltage	Current	Power Cord	Mass	Electro Chuck Master	Remarks
KETW-N1530	150 (5.90) × 300 (11.8)	150 (5.90)	300 (11.8)	19 (0.75)	245 (9.64)	4 (0.8+3.2) (0.15)	146 (5.74)	314 (12.3)	20 (0.78)	100 (3.93)	Clamping	90 VDC	0.4A	2m (78.7)	31kg/ 68 lb	ES-M103C ES-M305C EH-V305B EH-VE305B	※For types with a combination of a rectifier and demagnetizer, see pages of "Chuck Controllers." P54–P58
KETW-N1535	150 (5.90) × 350 (13.7)		350 (13.7)		293 (11.5)			364 (14.3)					0.45A		36kg/ 79 lb		
KETW-N1545	150 (5.90) × 450 (17.7)		450 (17.7)		397 (15.6)			464 (18.2)					0.62A		46kg/101 lb		
KETW-N2040	200 (7.87) × 400 (15.7)	200 (7.87)	400 (15.7)	25 (0.98)	349 (13.7)		196 (7.71)	414 (16.3)		120 (4.72)			0.7A		65kg/144 lb		
KETW-N2050	200 (7.87) × 500 (19.6)		500 (19.6)		445 (17.5)			514 (20.2)					0.8A	3m (118)	82kg/180 lb		
KETW-N2060	200 (7.87) × 600 (23.6)		600 (23.6)		549 (21.6)			614 (24.1)					0.92A		98kg/216 lb		
KETW-N2560	250 (9.84) × 600 (23.6)	250 (9.84)					246 (9.68)						1.2A		123kg/271 lb		
KETW-N3060	300 (11.8) × 600 (23.6)	300 (11.8)					296 (11.4)						1.56A		147kg/324 lb		

※If the magnetic force needs not be adjusted, use ES-M.
※The chuck controller and clamp parts are not included. The KANETEC chucks work best when a KANETEC chuck controller is used. ※Only the side stopper is included. (The back stopper is not included.)

Model KESL LATERAL FINE PITCH ELECTROMAGNETIC CHUCK

Grinding Cutting

KESL-1535A-1

Chuck controller required additionally

Pitches for comparison

[Application]
These are versatile electromagnetic chucks with poles in the longitudinal direction capable of holding workpieces, thin and thick, in grinding and light duty cutting. In particular, these chucks are suitable for grinding and light duty cutting of long thin workpieces and buff and belt grinding of large quantities of workpieces, which are difficult to hold by standard type electromagnetic chucks.

[Features]
- A fine pole pattern is arranged in the longitudinal direction.
- The N-S magnetic force lines are spaced relatively wide for good holding via a belt. (Note, however, that because the distribution of the holding power is not uniform, this model may not be suitable for grinding small workpieces arranged over the whole surface.)
- Powerful holding, but low height.

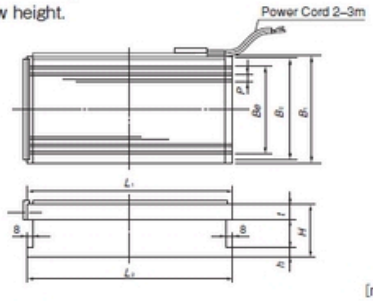

[mm (in)]

Model	Nominal Size	Work Face B_1	Work Face L_1	Work Face t	Work Face Be	Pole Pitch P	Mounting Face B_2	Mounting Face L_2	Mounting Face h	Height H	Voltage	Current	Power Cord	Mass	Electro Chuck Master
KESL-1025A-1	100 (3.93) × 250 (9.84)	100 (3.93)	250 (9.84)	20 (0.78)	77 (3.03)	4 (1+3) (0.15)	98 (3.85)	250 (9.84)	13 (0.51)	70 (2.75)	90 VDC	0.36A	2m (78.7)	12kg/ 26 lb	ES-M103C ES-M305C EH-V305B EH-VE305B P54–P58
KESL-1325A-1	125 (4.92) × 250 (9.84)	125 (4.92)			101 (3.97)		123 (4.84)					0.26A		14kg/ 31 lb	
KESL-1530A-1	150 (5.90) × 300 (11.8)	150 (5.90)	300 (11.8)		125 (4.92)		148 (5.82)	300 (11.8)				0.48A		19kg/ 42 lb	
KESL-1535A-1	150 (5.90) × 350 (13.7)		350 (13.7)					350 (13.7)				0.61A		23kg/ 51 lb	
KESL-1545A-1	150 (5.90) × 450 (17.7)		450 (17.7)					450 (17.7)				0.85A		29kg/ 64 lb	
KESL-2040A-1	200 (7.87) × 400 (15.7)	200 (7.87)	400 (15.7)		173 (6.81)		198 (7.79)	400 (15.7)				1.08A		34kg/ 75 lb	
KESL-2050A-1	200 (7.87) × 500 (19.6)		500 (19.6)					500 (19.6)				1.50A	3m (118)	42kg/ 93 lb	
KESL-2060A-1	200 (7.87) × 600 (23.6)		600 (23.6)					600 (23.6)				1.60A		51kg/113 lb	
KESL-2550A-1	250 (9.84) × 500 (19.6)	250 (9.84)	500 (19.6)	27 (1.06)	225 (8.85)		248 (9.76)	500 (19.6)		85 (3.34)		1.64A		62kg/137 lb	
KESL-3060A-1	300 (11.8) × 600 (23.6)	300 (11.8)	600 (23.6)		273 (10.7)		298 (11.7)	600 (23.6)				1.70A		98kg/216 lb	

※If the magnetic force needs not be adjusted, use ES-M. ※The chuck controller and clamp parts are not included. The KANETEC chucks work best when a KANETEC chuck controller is used.

Model KCT WATER-COOLED RECTANGULAR ELECTROMAGNETIC CHUCK

Grinding | Water cooled | Environmentally friendly

KCT-2550F

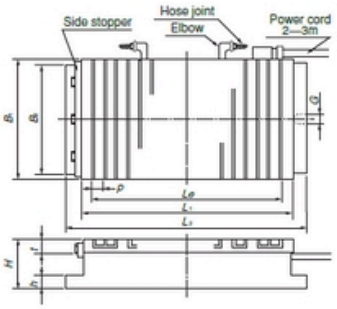

Chuck controller required additionally

[Application]
Since no heat is generated when the power is on, this model is suitable for high precision grinding.

[Features]
- A special construction to cool the electromagnetic coils directly.
- A unique construction; accuracy change is very small and temperature rise is minimized by using both cooling water flowing inside the chuck and grinding fluid sprayed over the top surface. This design minimizes thermal expansion of the chuck due to temperature rise.
- Cooling water flows inside the chuck, but KANETEC' s original design protects the internal coils from damage.
- Most suitable for dry grinding operations as heat of workpieces is also removed.
- A resin-bonded structural face plate having little environmental burden is employed.

[mm (in)]

Model	Nominal Size	Work Face				Pole Pitch	Mounting Face			Height	Mounting Hole	Hose Coupling	Voltage	Current	Power Cord	Mass	Electro Chuck Master	Remarks
		B_1	L_1	t	Le	P	B_2	L_2	h	H	G							
KCT-1025F	100 (3.93) × 250 (9.84)	100 (3.93)	250 (9.84)	21 (0.82)	211 (8.30)	11 (2+9) (0.43)	96 (3.78)	294 (11.5)	25 (0.98)	85 (3.34)	10 (0.39)	φ8 (0.31)	90 VDC	0.16A	2m (78.7)	15kg/ 33 lb	※ES-M103C ES-M305C EH-V305B EH-VE305B	※For types with a combination of a rectifier and demagnetizer, see pages of "Chuck Controllers." P54—P58
KCT-1325F	125 (4.92) × 250 (9.84)	125 (4.92)			212 (8.34)	14 (2+12) (0.55)	119 (4.68)				14 (0.55)			0.19A		19kg/ 41 lb		
KCT-1530F	150 (5.90) × 300 (11.8)	150 (5.90)	300 (11.8)		240 (9.44)		144 (5.66)	344 (13.5)						0.20A		26kg/ 57 lb		
KCT-1535F	150 (5.90) × 350 (13.7)		350 (13.7)		296 (11.6)			394 (15.5)						0.22A		31kg/ 68 lb		
KCT-1545F	150 (5.90) × 450 (17.7)		450 (17.7)		408 (16.0)			494 (19.4)						0.29A		39kg/ 85 lb		
KCT-2040F	200 (7.87) × 400 (15.7)	200 (7.87)	400 (15.7)		352 (13.8)		194 (7.63)	444 (17.4)						0.43A		46kg/101 lb		
KCT-2050F	200 (7.87) × 500 (19.6)		500 (19.6)		464 (18.2)			544 (21.4)						0.34A	3m (118)	57kg/125 lb		
KCT-2060F	200 (7.87) × 600 (23.6)		600 (23.6)		548 (21.5)			600 (23.6)			Clamping (No hole)			0.47A		66kg/145 lb		
KCT-2550F	250 (9.84) × 500 (19.6)	250 (9.84)	500 (19.6)		451 (17.7)	19.5 (2.5+17) (0.76)	240 (9.44)	500 (19.6)		95 (3.74)				0.56A		80kg/176 lb		
KCT-2560F	250 (9.84) × 600 (23.6)		600 (23.6)		529 (20.8)			600 (23.6)						0.72A		97kg/213 lb		
KCT-3050F	300 (11.8) × 500 (19.6)	300 (11.8)	500 (19.6)		451 (17.7)		290 (11.4)	500 (19.6)						0.68A		93kg/205 lb		
KCT-3060F	300 (11.8) × 600 (23.6)		600 (23.6)	25 (0.98)	529 (20.8)			600 (23.6)						1.06A		112kg/247 lb		
KCT-4050F	400 (15.7) × 500 (19.6)	400 (15.7)	500 (19.6)		451 (17.7)		390 (15.3)	500 (19.6)		100 (3.93)		φ12 (0.47)		0.96A		132kg/291 lb		
KCT-4060F	400 (15.7) × 600 (23.6)		600 (23.6)		529 (20.8)			600 (23.6)						1.09A		159kg/350 lb		
KCT-5050F	500 (19.6) × 500 (19.6)	500 (19.6)	500 (19.6)		451 (17.7)		490 (19.2)	500 (19.6)						0.93A		167kg/368 lb		
KCT-5060F	500 (19.6) × 600 (23.6)		600 (23.6)		529 (20.8)			600 (23.6)						1.06A		204kg/449 lb		

※If the magnetic force needs not be adjusted, use ES-M. ※A cooler unit is required additionally.
※The chuck controller and clamp parts are not included. The KANETEC chucks work best when a KANETEC chuck controller is used. ※Only the side stopper is included. (The back stopper is not included.)

Model LCU COOLER UNIT

Cooling water radiation and circulation unit

LCU-2A

[Application]
An air cooler unit to cool and circulate coolant in water-cooled type chucks.

[Features]
- The flow rate can be adjusted with a valve.
- Simple and compact for easy installation.
- Synchronized with room temperature by an air-cooled oil cooler.

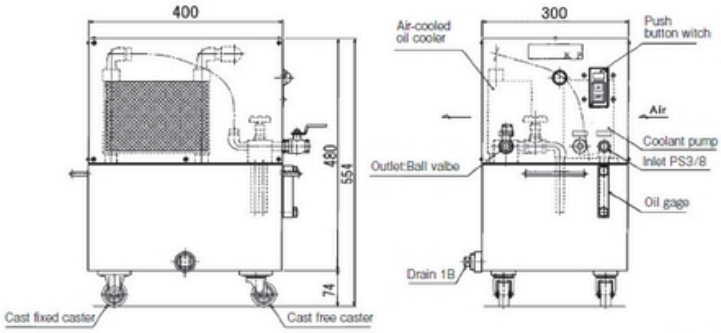

[mm (in)]

Model	Discharge Amount	Total Lift	Power Source	Required Power	Dimensions	Tank Capacity	Mass	Accessories
LCU-2A	30 ℓ / 43 ℓ / min(50 / 60hz)	2m (78.7)	Single phase 100 VAC (50 / 60Hz)	70W	300 (11.8) × 400 (15.7) × 554 (21.8)	20 ℓ	30kg/66 lb	Power cable 3 m (118)

※The recommended coolant is automotive long life coolant.
※The electromagnetic chucks to use must be those that consume less than 300 W (90V, 3.3 A).

Model RMAW FINE PITCH POWERFUL RECTANGULAR PERMANENT MAGNETIC CHUCK

A new construction and finer pole pitch to generate strongest holding power on small workpieces!

Grinding

RMAW-1018

[Application]
Suitable for grinding small and thin workpieces.

[Features]
- Holds small and thin (thinner than 3 mm) workpieces effectively.
- Holding performance greater than conventional models on hardened parts around molds.
- Gap performance improved over conventional models.

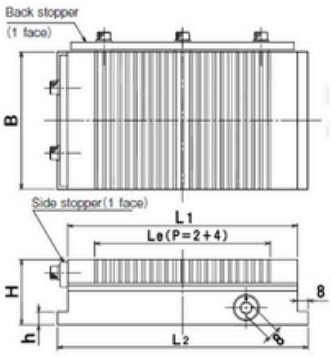

[mm (in)]

Model	Dimensions						Mass
	B	L1	Le	H	L2	h	
RMAW-1018	105 (4.13)	175 (6.88)	134 (5.27)	50 (1.96)	191 (7.51)	10 (0.39)	7kg/ 15.4 lb
RMAW-1325	125 (4.92)	250 (9.84)	206 (8.11)		266 (10.4)		12kg/ 26.4lb
RMAW-1530	150 (5.90)	300 (11.8)	254 (9.99)		316 (12.4)		18kg/ 39.6lb

※As for the handle, a hex wrench key is included.

Comparison of holding power on weak magnetic materials

Center – holding power
(□50 × t25:SKH2, HRC60 hardened test piece)

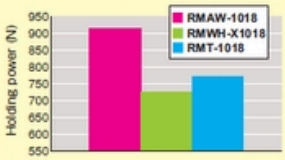

Relation between holding power and thickness

Center – thickness
(□25: S15C test piece)

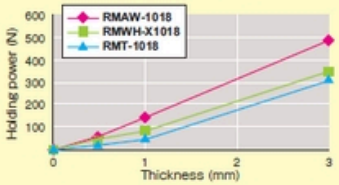

Model RMWH RECTANGULAR PERMANENT MAGNETIC MICROPITCH CHUCK

Grinding

RMWH-2040C

[Application]
Suitable for grinding thin, thick and small workpieces.

[Features]
- Extremely low profile, 45 mm for small to medium sizes and 50 mm for large sizes and light weight.
- A wide attractive area on the chuck work face, allowing the corners to be utilized.
- The magnetic force ON-OFF handle can be operated lightly thanks to a special slide design. The side insert type used allows the handle to be detached when it is not used.
- A micropitch type having very fine pole-to-pole pitches. This design provides effective holding power not only on thick workpieces but also on thin and small workpieces.
- Drip-proof specification. (Not usable in liquid)

※ For use in liquid, please use Model RMWH-ED.

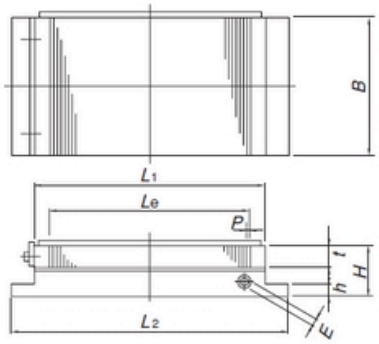

[mm (in)]

Model	Nominal Size	Work Face				Pole Pitch	Mounting Face			Height	Handle Hole	Mass
		B	L1	Le	t	P	B	L2	h	H	E	
RMWH- 713C	75 (2.95) × 130 (5.11)	75 (2.95)	130 (5.11)	103 (4.05)	18 (0.70)	3(1+2) (0.11)	75 (2.95)	146 (5.74)	10 (0.39)	45 (1.77)	8 (0.31)	3.8kg/ 8 lb
RMWH-1018C	105 (4.13) × 175 (6.89)	105 (4.13)	175 (6.89)	142 (5.59)			105 (4.13)	191 (7.52)				7kg/ 15 lb
RMWH-1025C	105 (4.13) × 250 (9.84)		250 (9.84)	208 (8.18)				266 (10.4)				9.5kg/ 20 lb
RMWH-1030C	105 (4.13) × 300 (11.8)		300 (11.8)	256 (10.0)				316 (12.4)				11.5kg/ 25 lb
RMWH-1325C	130 (5.11) × 250 (9.84)	130 (5.11)	250 (9.84)	208 (8.18)			130 (5.11)	266 (10.4)				12kg/ 26 lb
RMWH-1515C	150 (5.90) × 150 (5.90)	150 (5.90)	150 (5.90)	118 (4.64)			150 (5.90)	166 (6.53)				8.5kg/ 18 lb
RMWH-1530C	150 (5.90) × 300 (11.8)		300 (11.8)	256 (10.0)				316 (12.4)				16.5kg/ 36 lb
RMWH-1535C	150 (5.90) × 350 (13.7)		350 (13.7)	298 (11.7)				366 (14.4)				19kg/ 41 lb
RMWH-1545C	150 (5.90) × 450 (17.7)		450 (17.7)	394 (15.5)				466 (18.3)				24.5kg/ 53 lb
RMWH-2035C	200 (7.87) × 350 (13.7)	200 (7.87)	350 (13.7)	298 (11.7)			200 (7.87)	366 (14.4)				26kg/ 57 lb
RMWH-2040C	200 (7.87) × 400 (15.7)		400 (15.7)	346 (13.6)				416 (16.3)				29.5kg/ 64 lb
RMWH-2050C	200 (7.87) × 500 (19.6)		500 (19.6)	442 (17.4)				516 (20.3)	14 (0.55)	50 (1.97)		40kg/ 88 lb
RMWH-2060C	200 (7.87) × 600 (23.6)		600 (23.6)	541 (21.3)				616 (24.2)				48kg/105 lb
RMWH-2525C	250 (9.84) × 250 (9.84)	250 (9.84)	250 (9.84)	208 (8.18)			250 (9.84)	266 (10.4)	10 (0.39)	45 (1.77)		24kg/ 52 lb
RMWH-2530C	250 (9.84) × 300 (11.8)		300 (11.8)	256 (10.0)				316 (12.4)				28kg/ 61 lb
RMWH-3050C	300 (11.8) × 500 (19.6)	300 (11.8)	500 (19.6)	442 (17.4)			300 (11.8)	516 (20.3)	14 (0.55)	50 (1.97)		60kg/132 lb
RMWH-3060C	300 (11.8) × 600 (23.6)		600 (23.6)	541 (21.3)				616 (24.2)				72kg/158 lb

※As for the handle, a hex wrench key is included.

Model RMWH-J ADDITIONALLY WORKABLE RECTANGULAR PERMANENT MAGNETIC CHUCK

Grinding

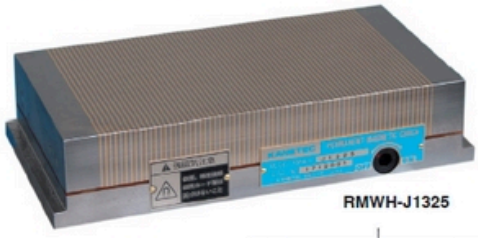

RMWH-J1325

<An example of additional work according to workpiece>

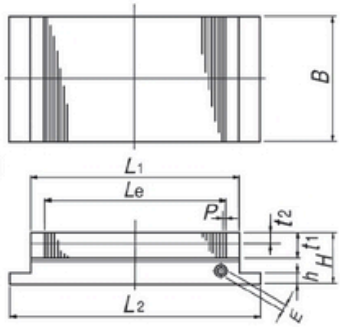

[Application]
Suitable for grinding thin, thick and small workpieces.

[Features]
- As with the standard Model RMWH, this is a micropitch type having very fine pole-to-pole pitches. This design provides effective holding power not only on thick workpieces but also on thin and small workpieces.
- Since the chuck work face can be machined to a depth of 15 mm max., workpieces that do not have a flat attractive face can also be held firmly.
- By machining holes and slots according to workpiece shapes in advance, the workpiece securing and setting up time can be reduced significantly when compared with the conventional mechanical clamping method.
- Since the face plate is thicker than the standard Model RMWH by 15 mm, this chuck can be used for a longer period of time in applications that require frequent self-cut.
- The chuck mounting section is made of iron, which allows the chuck to be held on an existing magnetic chuck.

Sizes up to 130 mm wide × 250mm long maximum available.

[mm(in)]

Model	Nominal Size	Work Face				Pole Pitch	Mounting Face			Height	Processable Dimensions	Handle Hole	Mass
		B	L_1	Le	t_1	P	B	L_2	h	H	t_2	E	
RMWH-J1325	130(5.11)×250(9.84)	130(5.11)	250(9.84)	208(8.18)	33(1.29)	3(1+2)0.11(0.03+0.07)	130(5.11)	266(10.4)	10(0.39)	55(2.16)	Max.15(0.59)	8(0.31)	15kg/33.0 lb

※As for the handle, a hex wrench key is included.

Model RMWH-X RECTANGULAR PERMANENT MAGNETIC SUPER MICROPITCH CHUCK

Grinding

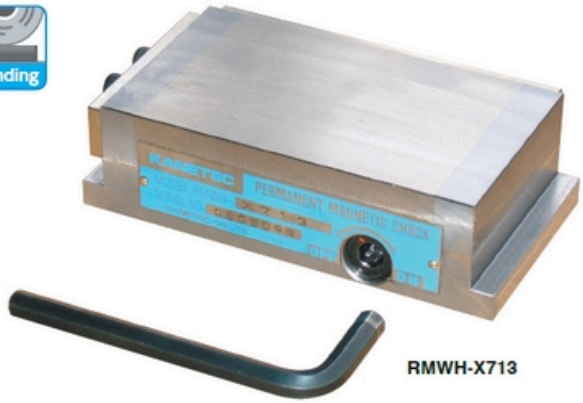

RMWH-X713

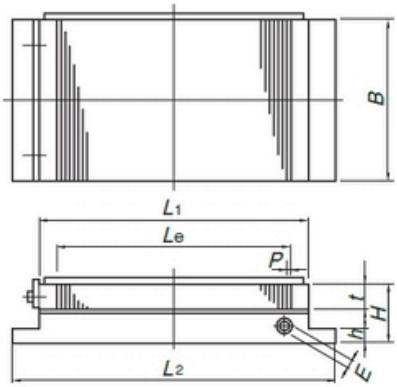

It's popular to our users processing small or thin work pieces!

[Application]
Suitable for grinding thin workpieces. Usable for electric discharge machining also.

[Features]
- Super micropitch of 1.2 (0.2 +1).
- Thin sheet holding performance superior to that of Model RMWH-A-H and Model RMWH-C.

Relation between the holding power and the thickness

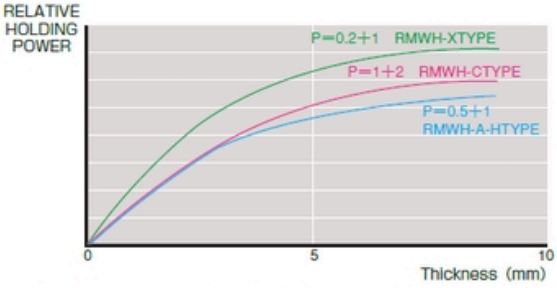

NOTE The graph shows that there is a difference between the test piece by an average characteristic size □ 50.
Depends on the size of the workpiece material, etc. and the size of the chuck.

[mm(in)]

Model	Nominal Size	Work Face				Pole Pitch	Mounting Face			Height	Handle Hole	Mass
		B	L_1	Le	t	P	B	L_2	h	H	E	
RMWH-X 713	75(2.95)×130(5.11)	75(2.95)	130(5.11)	102.2(4.02)	18(0.70)	0.2+1(0.04)	75(2.95)	146(5.74)	10(0.39)	40(40.0)	8(0.31)	3kg/6.61 lb
RMWH-X1018	105(4.13)×175(6.89)	105(4.13)	175(6.89)	144.2(5.67)			105(4.13)	191(7.52)				5.5kg/12.1 lb
RMWH-X1325	130(5.11)×250(9.84)	130(5.11)	250(9.84)	209 (8.22)			130(5.11)	266(10.4)				10kg/22.0 lb
RMWH-X1515	150(5.90)×150(5.90)	150(5.90)	150(5.90)	117.8(4.63)			150(5.90)	166(6.53)				7kg/15.4 lb
RMWH-X1530	150(5.90)×300(11.8)		300(11.8)	257 (10.1)				316(12.4)				14kg/30.8 lb

※As for the handle, a hex wrench key is included.

Model EPT/EPT-LW PERMANENT ELECTROMAGNETIC CHUCK (STANDARD/LOW MAGNETIC FORCE CONTROL)

Grinding | Power saving | Minimal heat generation | Environmentally friendly

Chuck controller required additionally

EPT-3060F

[Application]
Suitable for high precision grinding and slicing.

[Features]
- Since electricity is supplied momentarily only to control the magnetomotive force when mounting/demounting a workpiece, little heat is generated internally to enable highly precise machining.
- Since electricity needs not be supplied continuously even while holding a workpiece, the running cost is very low.
- Since the holding power is maintained by the permanent magnet, safety is secured in the event of power failure and cable breakage.
- A resin-bonded structural face plate having little environmental burden is employed.

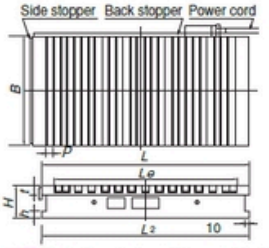

NOTE: The L_2 dimension has not been machined together with L and therefore, there may be some variation.

About EPT-LW

Model EPT-LW is equipped with a low magnetic force (weak attraction) control function that is difficult with conventional permanent electromagnetic chucks and therefore facilitates strain relieving and workpiece positioning at the same level as electromagnetic chucks. (When the low magnetic force control is active, the power is supplied continuously.)
Please note that a dedicated Chuck Master (Model EPH-LW) (see page 39) needs to be used together.

[mm (in)]

Model		Nominal Size	Work Face				Pole Pitch	Mounting Face		Height	Voltage		Current		Power Cord	Mass	Electro Chuck Master	
Standard	Low mag. force control		B	L	Le	t	P	L_2	h	H	Standard	Low mag. force control	Standard	Low mag. force control			Standard	Low mag. force control
EPT- 1530F	EPT-LW 1530F	150 (5.90) × 300 (11.8)	150 (5.90)	300 (11.8)	240 (9.44)	20.5 (0.80)	14(2+12) 0.55 (0.07+0.47)	300 (11.8)	20 (0.78)	80 (3.15)	90 VDC	180 VDC	1.91A	0.80A	2m (78.7)	24kg/ 52 lb	EPS-215B P54—P58	EPH-LW205B EPH-LWE205B P54—P58
EPT- 1535F	EPT-LW 1535F	150 (5.90) × 350 (13.7)		350 (13.7)	296 (11.6)			350 (13.7)					2.43A	0.93A		28kg/ 61 lb		
EPT- 1545F	EPT-LW 1545F	150 (5.90) × 450 (17.7)		450 (17.7)	380 (14.9)			450 (17.7)					2.64A	1.17A		36kg/ 79 lb		
EPT- 2050F	EPT-LW 2050F	200 (7.87) × 500 (19.6)	200 (7.87)	500 (19.6)	436 (17.1)			500 (19.6)					5.88A	3.31A	3m (118)	53kg/ 116 lb		
EPT- 2060F	EPT-LW 2060F	200 (7.87) × 600 (23.6)		600 (23.6)	548 (21.5)			600 (23.6)					7.87A	3.82A		65kg/ 143 lb		
EPT- 3060F	EPT-LW 3060F	300 (11.8) × 600 (23.6)	300 (11.8)		529 (20.8)	25.0 (0.98)	19.5(2.5+17) 0.76 (0.09+0.66)			100 (3.93)			6.14A	2.55A		140kg/ 308 lb		
EPT- 4080F	EPT-LW 4080F	400 (15.7) × 800 (31.5)	400 (15.7)	800 (31.5)	724 (28.5)			800 (31.5)					11.0A	6.59A	5m (196)	211kg/ 465 lb		EPH-LWE210B P54—P58
EPT-40100F	EPT-LW40100F	400 (15.7) × 1000 (39.4)		1000 (39.4)	919 (36.1)			1000 (39.4)					12.5A	6.45A		265kg/ 584 lb		
EPT- 5080F	EPT-LW 5080F	500 (19.6) × 800 (31.5)	500 (19.6)	800 (31.5)	724 (28.5)			800 (31.5)					9.01A	5.41A				
EPT-50100F	EPT-LW50100F	500 (19.6) × 1000 (39.4)		1000 (39.4)	919 (36.1)			1000 (39.4)					11.7A	6.00A		330kg/ 727 lb		

※The chuck controller and clamp parts are not included. ※The KANETEC chucks work best when a KANETEC chuck controller is used.
※Turning the permanent electromagnetic chucks on and off must be limited to once per several minutes. If on/off operations are repeated frequently, the chucks may be damaged by overheat.

Model EPT-H POWERFUL PERMANENT ELECTROMAGNETIC CHUCK

Grinding | Power saving | Minimal heat generation | Environmentally friendly

Chuck controller required additionally

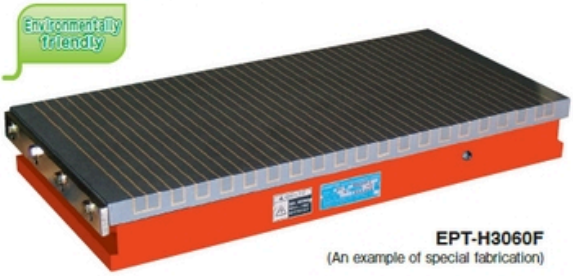

EPT-H3060F
(An example of special fabrication)

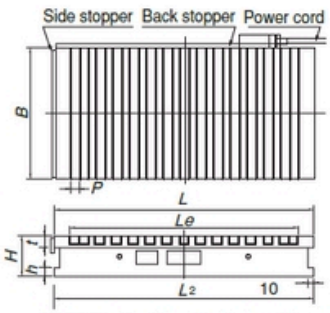

NOTE: The L_2 dimension has not been machined together with L and therefore, there may be some variation.

[Application]
Suitable for high precision grinding and slicing.

[Features]
- Compared with the standard type (EPT), these chucks generate a larger magnetic force and therefore are capable of securing workpieces firmly during grinding of large machining load.
- A resin-bonded structural face plate having little environmental burden is employed.

[mm (in)]

Model	Nominal Size	Work Face				Pole Pitch	Mounting Face		Height	Voltage	Power Cord	Mass	Electro Chuck Master
		B	L	Le	t	P	L_2	h	H				
EPT-H1530F	150 (5.90) × 300 (11.8)	150 (5.90)	300 (11.8)	240 (9.44)	30 (1.18)	14(2+12) 0.55 (0.07+0.47)	300 (11.8)	20 (0.78)	100 (3.93)	180 VDC	2m (78.7)	30kg/ 66.1 lb	EPS-W215B P54—P58
EPT-H2050F	200 (7.87) × 500 (19.6)	200 (7.87)	500 (19.6)	436 (17.1)			500 (19.6)				3m (118)	83kg/ 183 lb	
EPT-H3060F	300 (11.8) × 600 (23.6)	300 (11.8)	600 (23.6)	529 (20.8)		19.5(2.5+17) 0.76 (0.09+0.66)	600 (23.6)					142kg/ 313 lb	
EPT-H4080F	400 (15.7) × 800 (31.5)	400 (15.7)	800 (31.5)	724 (28.5)			800 (31.5)				5m (196)	215kg/ 474 lb	
EPT-H50100F	500 (19.6) × 1000 (39.4)	500 (19.6)	1000 (39.4)	919 (36.1)			1000 (39.4)					335kg/ 738 lb	

※The chuck controller and clamp parts are not included. ※The KANETEC chucks work best when a KANETEC chuck controller is used.
※Turning the permanent electromagnetic chucks on and off must be limited to once per several minutes. If on/off operations are repeated frequently, the chucks may be damaged by overheat.

EPT / EPT-LW / EPT-H / EPTW / EPTW-N / EP-DWM

Model EPTW PERMANENT ELECTROMAGNETIC MICROPITCH CHUCK

Grinding | Power saving | Minimal heat generation

EPTW-1530

Chuck controller required additionally

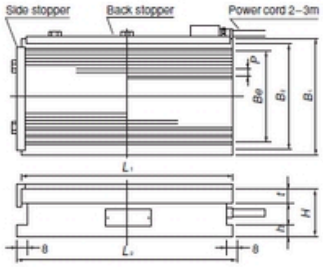

[Application]
Suitable for precision grinding on grinders and for holding thin and thick workpieces having a large area.

[Features]
- Thanks to finer pole pitches on the chuck work face, these chucks hold thin and wide workpieces firmly.
- Since electricity is supplied momentarily only to control the magnetomotive force when mounting/demounting a workpiece, little heat is generated internally to maintain accuracy.
- Since electricity needs not be supplied continuously even while holding a workpiece, the running cost is very low.
- Since the holding power is maintained in the event of power failure and cable breakage, safety is secured.

[mm (in)]

Model	Nominal Size	Work Face B_1	Work Face L_1	Work Face t	Work Face Be	Pole Pitch P	Mounting Face B_2	Mounting Face L_2	Mounting Face h	Height H	Voltage	Power Cord	Mass	Electro Chuck Master
EPTW-1530	150 (5.90) × 300 (11.8)	150 (5.90)	300 (11.8)	20 (0.78)	125 (4.92)	4 (0.8+3.2) 0.15 (0.03+0.12)	148 (5.82)	300 (11.8)	18 (0.70)	95 (3.74)	90 VDC	2m (78.7)	29kg/ 63 lb	EPS-215B P54~P58
EPTW-1545	150 (5.90) × 450 (17.7)		450 (17.7)					450 (17.7)					44kg/ 97 lb	
EPTW-2040	200 (7.87) × 400 (15.7)	200 (7.87)	400 (15.7)	25 (0.98)	173 (6.81)		198 (7.79)	400 (15.7)	20 (0.78)	120 (4.72)			65kg/143 lb	
EPTW-2050	200 (7.87) × 500 (19.6)		500 (19.6)					500 (19.6)				3m (118)	82kg/180 lb	
EPTW-2560	250 (9.84) × 600 (23.6)	250 (9.84)	600 (23.6)		217 (8.54)		248 (9.76)	600 (23.6)					123kg/271 lb	
EPTW-3060	300 (11.8) × 600 (23.6)	300 (11.8)			269 (10.5)		298 (11.7)						147kg/324 lb	

※The chuck controller and clamp parts are not included. ※The KANETEC chucks work best when a KANETEC chuck controller is used.
※Turning the permanent electromagnetic chucks on and off must be limited to once per several minutes. If on/off operations are repeated frequently, the chucks may be damaged by overheat.

Model EPTW-N PERMANENT ELECTROMAGNETIC MICROPITCH CHUCK

Grinding | Power saving | Minimal heat generation

EPTW-N2040

Environmentally friendly

Chuck controller required additionally

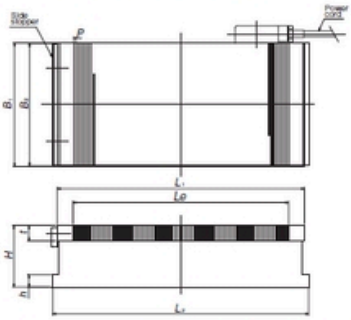

[Application]
Suitable for grinding of thin and small workpieces.

[Features]
- Generates strong holding power on workpieces of □25 mm and larger.
- Instead of the conventional magnetic pole longitudinal patterns, the transverse magnetic pole patterns are used.
- A resin-bonded structural face plate having little environmental burden is employed.

[mm (in)]

Model	Nominal Size	Work Face B_1	Work Face L_1	Work Face t	Work Face Le	Pole Pitch P	Mounting Face B_2	Mounting Face L_2	Mounting Face h	Height H	Voltage	Power Cord	Mass	Electro Chuck Master
EPTW-N1530	150 (5.90) × 300 (11.8)	150 (5.90)	300 (11.8)	25 (0.98)	261 (10.2)	4 (1+3) 0.15 (0.04+0.11)	148 (5.82)	314 (12.3)	20 (0.78)	100 (3.93)	180 VDC	2m (78.7)	30kg/ 66 lb	EPS-W215B P54~P58
EPTW-N1545	150 (5.90) × 450 (17.7)		450 (17.7)		397 (15.6)			464 (18.2)					45kg/ 99 lb	
EPTW-N2040	200 (7.87) × 400 (15.7)	200 (7.87)	400 (15.7)		349 (13.7)		198 (7.79)	414 (16.2)					52kg/114 lb	
EPTW-N2050	200 (7.87) × 500 (19.6)		500 (19.6)		449 (17.6)			514 (20.2)				3m (118)	65kg/143 lb	
EPTW-N2560	250 (9.84) × 600 (23.6)	250 (9.84)	600 (23.6)		549 (21.6)		246 (9.68)	614 (24.1)		110 (4.33)			107kg/235 lb	
EPTW-N3060	300 (11.8) × 600 (23.6)	300 (11.8)					296 (11.6)						128kg/282 lb	

※The chuck controller and clamp parts are not included. ※The KANETEC chucks work best when a KANETEC chuck controller is used.
※Turning the permanent electromagnetic chucks on and off must be limited to once per several minutes. If on/off operations are repeated frequently, the chucks may be damaged by overheat.

Model EP-DWM POWERFUL PERMANENT ELECTROMAGNETIC CHUCK FOR HEAVY DUTY CUTTING

Chuck controller required additionally

Strong magnetic force & good release performance & high water-tightness!

EP-DWM3060

Grinding | Cutting

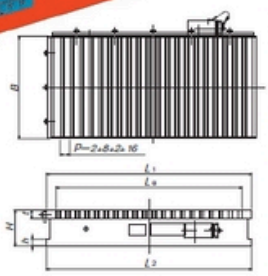

Environmentally friendly | Power saving | Minimal heat generation

[Application]
Suitable for such precision machining of relatively large load as heavy duty grinding and cutting and for securing workpieces having steps such as linear motion guides.

[Features]
- Capable of holding relatively small workpieces, workpieces having a small attractive area and concave workpieces.
- The addition of a construction dedicated to demagnetization has improved the workpiece release performance when the chuck is turned off.
- Hardened steel and special steel workpieces having large residual magnetism can be released quickly.
- Electricity is supplied momentarily for mounting and demounting workpieces, thus minimal heat is generated and electricity is saved.
- The chucks can be used in wet operations and have improved water-tightness.
- A resin-bonded structural face plate having little environmental burden is employed.

[mm (in)]

Model	Work Face B	Work Face L_1	Work Face Le	Work Face t	Mounting Face L_2	Mounting Face h	Height H	Mass	Electro Chuck Master
EP-DWM2050	200 (7.87)	490 (19.2)	432 (17.0)	25 (0.98)	490 (19.2)	20 (0.78)	105 (4.13)	70kg/154 lb	EPS-D2100B P54~P58
EP-DWM3060	300 (11.8)	600 (23.6)	544 (21.4)		600 (23.6)			125kg/275 lb	
EP-DWM4080	400 (15.7)	820 (32.2)	768 (30.2)		820 (32.2)			230kg/507 lb	

※The chuck controller and clamp parts are not included. ※The KANETEC chucks work best when a KANETEC chuck controller is used.
※Turning the permanent electromagnetic chucks on and off must be limited to once per several minutes. If on/off operations are repeated frequently, the chucks may be damaged by overheat.

Model KETN POWERFUL WAVEFORM ELECTROMAGNETIC CHUCK

Cutting

Environmentally friendly

KETN-4080A

Chuck controller required additionally

[Application]
A chuck for cutting by a milling machine, planomiller, etc. The wavy pattern of the separator helps distribute the magnetic force uniformly over the whole attractive surface and increases the overall magnetic force. Thus, this is a general-purpose chuck for a wide range of cutting applications.

[Features]
- Electromagnetic chucks generating strong holding power specially for cutting operations.
- Specially designed to minimize influence of magnetism on cutters.
- For heavy duty cutting, Model KETZ, super powerful electromagnetic chuck, is available, but this model has a wider application range that includes workpieces thinner than 15 mm, for which Model KETZ is not suitable.

An example of mounting on machine

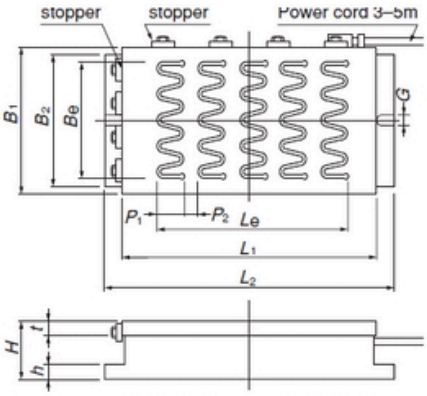

[mm (in)]

Model	Nominal Size	Work Face B_1	Work Face L_1	Work Face t	Work Face B_e	Work Face L_e	Pole Pitch P_1	Pole Pitch P_2	Mounting Face B_2	Mounting Face L_2	Mounting Face h	Height H	Mounting Hole G	Voltage	Current	Mass	Electro Chuck Master	Remarks
KETN- 1530A	150(5.90) × 300(11.8)	150(5.90)	300(11.8)	20 (0.78)	112(4.40)	248(9.76)	28 (1.10)	16 (0.62)	146(5.74)	344(13.5)	18 (0.70)	100 (3.93)	14	90 VDC	0.49A	27kg/ 59lb	※ES-M103C ES-M305C EH-V305B EH-VE305B	※For types with a combination of a rectifier and demagnetizer, see pages of "Chuck Controllers." P54–P58
KETN- 1545A	150(5.90) × 450(17.7)		450(17.7)			404(15.9)	26 (1.02)			494(19.4)					0.87A	41kg/ 90lb		
KETN- 2050A	200(7.87) × 500(19.6)	200(7.87)	500(19.6)	25 (0.98)	152(5.98)	440(17.3)	22 (0.86)		196(7.71)	544(21.4)	20 (0.78)	120 (4.72)			1.09A	80kg/ 176lb		
KETN- 2060A	200(7.87) × 600(23.6)		600(23.6)			523(20.5)	22.5(0.88)			600(23.6)			Clamping		1.18A	98kg/ 216lb		
KETN- 2550A	250(9.84) × 500(19.6)	250(9.84)	500(19.6)		208(8.18)	440(17.3)	22 (0.86)		246(9.68)	544(21.4)			14		1.42A	102kg/ 224lb		
KETN- 3060A	300(11.8) × 600(23.6)	300(11.8)	600(23.6)		246(9.68)	523(20.5)	22.5(0.88)		294(11.5)	600(23.6)			Clamping		1.59A	130kg/ 286lb		
KETN- 3080A	300(11.8) × 800(31.5)		800(31.5)			722(28.4)	26 (1.02)			800(31.5)					2.21A	173kg/ 381lb		
KETN-30100A	300(11.8) × 1000(39.4)		1000(39.4)			919(36.1)	26.5(1.04)			1000(39.4)					3.35A	240kg/ 529lb	Above models except for the one marked by ※.	
KETN- 4080A	400(15.7) × 800(31.5)	400(15.7)	800(31.5)		342(13.4)	722(28.4)	25 (0.98)		390(15.3)	800(31.5)					3.05A	230kg/ 507lb		
KETN-40100A	400(15.7) × 1000(39.4)		1000(39.4)			919(36.1)	26.5(1.04)			1000(39.4)					4.17A	288kg/ 634lb		
KETN-50100A	500(19.6) × 1000(39.4)	500(19.6)			432(17.0)	920(36.2)	23 (0.90)		490(19.2)						5.86A	400kg/ 881lb	EH-VE210E	
KETN-60100A	600(23.6) × 1000(39.4)	600(23.6)			522(25.5)	924(36.3)	31 (1.22)		590(23.2)						5.66A	470kg/1036lb		

※The power cord is 3 m for KETN-1530A and 1545A and 5 m for other models.
※If the magnetic force needs not be adjusted, use ES-M.
※The chuck controller and clamp parts are not included. The KANETEC chucks work best when a KANETEC chuck controller is used.

Model KETZ SUPER POWERFUL ELECTROMAGNETIC CHUCK

Cutting

Environmentally friendly

KETZ-2550B

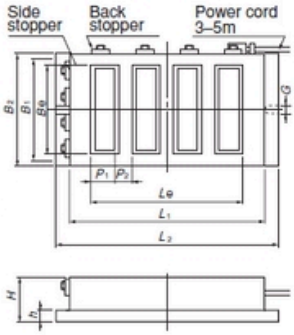

Chuck controller required additionally

[Application]
Designed for heavy duty cutting by a milling machine and planomiller. Most suitable for powerful chucking of thick workpieces and high-speed cutting where a large cutting force is exerted.

[Features]
- Super powerful electromagnetic chucks specially designed for heavy duty cutting.
- Various measures provided for easy mounting, easy wiring and quick elimination of residual magnetism.
- Very effective holding power for workpieces that are 15 mm or thicker and sized 140×140 mm or larger.

[mm (in)]

Model	Nominal Size	Work Face B_1	Work Face L_1	Work Face L_e	Work Face B_e	Pole Pitch P_1	Pole Pitch P_2	No.of Poles	Mounting Face B_2	Mounting Face L_2	Mounting Face h	Height H	Mounting Hole G	Voltage	Current	Mass	Electro Chuck Master	Remarks
KETZ- 1530B	150 (5.90) × 300 (11.8)	150 (5.90)	300 (11.8)	240 (9.44)	90 (3.54)	228 (8.97)	—	1	156 (6.14)	350 (13.7)	18 (0.70)	90 (3.54)	14	90 VDC	0.45A	28kg/ 61lb	※ES-M103C ES-M305C EH-V305B EH-VE305B	※For types with a combination of a rectifier and demagnetizer, see pages of "Chuck Controllers." P54—P58
KETZ- 1545B	150 (5.90) × 450 (17.7)		450 (17.7)	390 (15.3)		378 (14.8)	—			500 (19.6)					0.66A	42kg/ 92lb		
KETZ- 2050B	200 (7.87) × 500 (19.6)	200 (7.87)	500 (19.6)	422 (16.6)	160 (6.29)	62 (2.44)	54 (2.12)	4	206 (8.10)	520 (20.4)	20 (0.78)	100 (3.93)	Clamping (No hole)		0.90A	68kg/ 149lb		
KETZ- 2060B	200 (7.87) × 600 (23.6)		600 (23.6)	520 (20.4)		60 (2.36)	52 (2.04)	5		620 (24.4)					0.95A	79kg/ 174lb		
KETZ- 2080B	200 (7.87) × 800 (31.5)		800 (31.5)	718 (28.2)		58 (2.28)	50 (1.96)	7		820 (32.2)					1.42A	115kg/ 253lb		
KETZ- 2550B	250 (9.84) × 500 (19.6)	250 (9.84)	500 (19.6)	422 (16.6)	200 (7.87)	62 (2.44)	54 (2.12)	4	256 (10.0)	520 (20.4)		110 (4.33)			1.16A	94kg/ 207lb		
KETZ- 2560B	250 (9.84) × 600 (23.6)		600 (23.6)	520 (20.4)		60 (2.36)	52 (2.04)	5		620 (24.4)					1.26A	118kg/ 260lb		
KETZ- 3060B	300 (11.8) × 600 (23.6)	300 (11.8)	600 (23.6)	520 (20.4)	240 (9.44)				306 (12.0)						1.64A	143kg/ 315lb		
KETZ- 3090B	300 (11.8) × 900 (35.4)		900 (35.4)	817 (32.1)		67 (2.63)	56 (2.20)	7		920 (36.2)					3.04A	203kg/ 447lb	Above models except for the one marked by ※.	
KETZ- 4080B	400 (15.7) × 800 (31.5)	400 (15.7)	800 (31.5)	718 (28.2)	340 (13.3)	58 (2.28)	50 (1.96)		410 (16.1)	820 (32.2)					3.23A	240kg/ 529lb		
KETZ-40100B	400 (15.7) × 1000 (39.4)		1000 (39.4)	917 (36.1)		65 (2.55)	55 (2.16)	8		1020 (40.1)					3.69A	300kg/ 661lb		
KETZ-50100B	500 (19.6) × 1000 (39.4)	500 (19.6)	1000 (39.4)		430 (16.9)				510 (20.0)						3.95A	375kg/ 826lb		
◎KETZ-50150C	500 (19.6) × 1500 (59.0)		750 (29.5) × 2	1417 (55.7)			52 (2.04)	6×2		1520 (59.8)					2.69A×2	552kg/1217lb	EH-VE210E	
KETZ-60100B	600 (23.6) × 1000 (39.4)	600 (23.6)	1000 (39.4)	917 (36.1)	530 (20.8)		55 (2.16)	8	610 (24.0)	1020 (40.1)					5.30A	414kg/ 912lb		
◎KETZ-60150C	600 (23.6) × 1500 (59.0)		750 (29.5) × 2	1412 (55.5)			52 (2.04)	6×2		1520 (59.8)					3.51A×2	650kg/1433lb		

※The power cord is 3 m for KETZ-1530B and 1545B and 5 m for others. ※If the magnetic force needs not be adjusted, use ES-M. ※Sizes not listed above are also available.
※The chuck controller and clamp parts are not included. The KANETEC chucks work best when a KANETEC chuck controller is used.
※The models marked by ◎ are of duplex type. Please provide information such as a center connecting hole position. Also the terminal box TB-2PD is required for connection to the Chuck Master.

Model KEZX SUPER POWERFUL ELECTROMAGNETIC CHUCK WITH T-SLOTS

Cutting

Environmentally friendly

Chuck controller required additionally

KEZX-60100B

An example of vertical usage

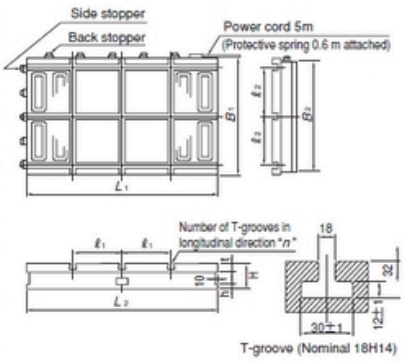

[Application]
A super powerful electromagnetic chuck having T-slots for heavy duty cutting. A range of workpieces that can be held has been expanded by a combination of a quick working magnet system and clamps by use of T-grooves.
As the mechanical clamping mechanism is incorporated, irregularly shaped workpieces and nonmagnetic workpieces that cannot be held by normal electromagnetic chucks can be held easily.
When clamping a nonmagnetic workpiece, such work as demounting the electromagnetic chuck from the machine table can be eliminated.
Model KEZX comes both in the flat type and vertical type.

[Features]
- Super powerful electromagnetic chuck specially designed for heavy duty cutting.
- Small and irregularly shaped workpieces can be held firmly by a combination of a magnet and clamping by use of T-slots.
- Since a nonmagnetic workpiece can be secured by clamping by use of T-slots, such steps as mounting and demounting the electromagnetic chuck to and from the machine table are not required.
- With the vertical type, effective usage of T-grooves with the magnetic force of the electromagnetic chuck reduced (or turned off completely) facilitates positioning of the workpiece or obtaining the reference plane.
- Workpieces having a small attractive face area can also be clamped firmly.

[mm (in)]

Model	Nominal Size	Work Face B_1	Work Face L_1	Work Face t	Work Face ℓ_1	Work Face ℓ_2	Number of T-slots X	Number of T-slots Y	Mounting Face B_2	Mounting Face L_2	Mounting Face h	Height H	Voltage	Current	Mass	Electro Chuck Master
KEZX-50100B	500 (19.6) × 1000 (39.4)	500 (19.6)	1000 (39.4)	50 (1.96)	242 (9.52)	200 (7.87)	3	3	490 (19.2)	1000 (39.4)	20 (0.78)	130 (5.11)	90 VDC	4.2A	442kg/ 974 lb	5A Series
KEZX-50150B	500 (19.6) × 1500 (59.0)		1500 (59.0)		(238) (9.36)			5		1500 (59.0)				6.1A	663kg/1462 lb	EH-VE210E
KEZX-60100B	600 (23.6) × 1000 (39.4)	600 (23.6)	1000 (39.4)		242 (9.52)	250 (9.84)		3	590 (23.2)	1000 (39.4)				5.7A	530kg/1168 lb	P54—P58

※"5A Series" refers to Chuck Masters in general the rated output current of which is 5A.
※The chuck controller and clamp parts are not included. The KANETEC chucks work best when a KANETEC chuck controller is used.

Model RMT-J ADDITIONALLY WORKABLE RECTANGULAR PERMANENT MAGNETIC CHUCK

Cutting Grinding

RMT-J2020

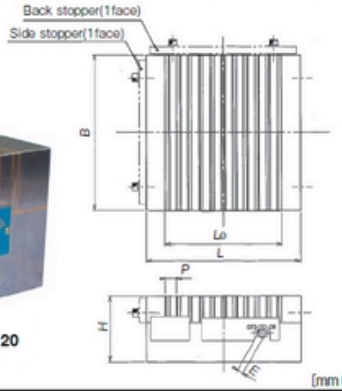

[Application]
Powerful permanent magnetic chucks for a wide range of applications from heavy duty grinding to light duty cutting. Usable in liquid also.

[Features]
- By additionally machining the work face, it becomes possible to hold by magnetism such irregular shaped workpieces that cannot be held on a flat surface. Also by additionally making mounting holes on the mounting face, it becomes possible to mount the chuck on pallets, etc.
- The work face can be machined to a depth of 13 mm max. and the mounting face to a depth of 25 mm max.

< work on work face> work on mounting face>

[mm (in)]

Model	Nominal Size	Work Face			Pole Pitch	Height	Handle Hole	Additionally Workable Depth		Mass
		B	L	Le	P	H	E	Work Face	Mounting Face	
RMT-J1515	150 (5.90) ×150 (5.90)	150 (5.90)	150 (5.90)	107.7 (4.24)	14.5 (1.5+3.2+1.5+8.3) 0.57 (0.05+0.12+0.05+0.32)	85 (3.34)	8 (0.31)	Max.13 (0.51)	Max.25 (0.98)	15kg/ 33.0 lb
RMT-J2020	200 (7.87) ×200 (7.87)	200 (7.87)	200 (7.87)	151.2 (5.95)						27kg/ 59.5 lb

※A hex wrench key is included with Model RMT-J1515 and a dedicated handle is included with Model RMT-J2020.

Model RMA-V VICE CLAMP TYPE PERMANENT MAGNETIC CHUCK FOR CUTTING

Cutting

Heavy duty application

RMA-V1530

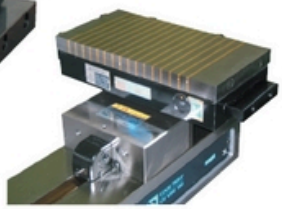

[Application]
Strong holding power for various cutting applications.

[Features]
- Direct clamping in a vice by use of a block for easy removal of the chuck.
- By securing a workpiece overhanging, 5 faces can be machined in one chucking.
- The setup work is done more efficiently than when setting a workpiece in a vice.

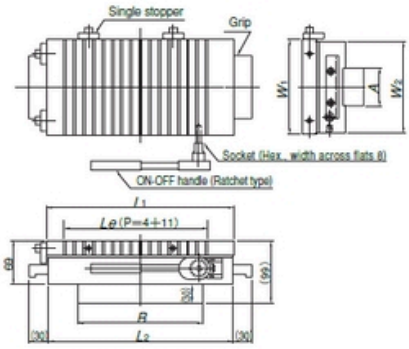

[mm (in)]

Model	Dimensions							Holding Power	Mass
	W_1	L_1	W_2	L_2	Le	A	B		
RMA-V1325	125 (4.92)	250 (9.84)	121 (4.76)	246 (9.68)	184 (7.24)	50 (1.96)	150 (5.90)	10kN	18kg/ 39.6 lb
RMA-V1530	150 (5.90)	300 (11.8)	146 (5.74)	296 (11.6)	229 (9.01)	60 (2.36)	200 (7.87)	15kN	27kg/ 59.5 lb

※The ratchet handle (with socket) is included. ※For higher accuracy, the work face needs to be re-ground.
※The holding power is based on a test piece of SS400,50mm thick, ground surface held on the whole face.

Model RMT-V VICE CLAMP TYPE PERMANENT MAGNETIC CHUCK

Cutting

Light duty cutting

RMT-V1018

[Application]
Most suitable for holding thin workpieces that cannot be secured by a machine vice directly.

[Features]
- Direct clamping in a vice by use of a block for easy removal of the chuck.

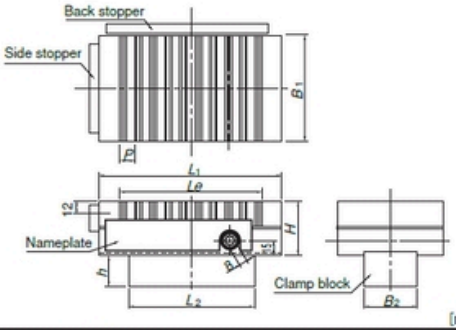

[mm (in)]

Model	Dimensions								Mass
	B_1	L_1	Le	P	H	B_2	L_2	h	
RMT-V1018	100 (3.93)	175 (6.89)	136.7 (5.38)	14.5 (1.5+3.2+1.5+8.3) (0.57)	53 (2.08)	50 (1.96)	120 (4.72)	30 (1.18)	8.4kg/18 lb
RMT-V1325	125 (4.92)	250 (9.84)	209.2 (8.23)				140 (5.51)		13.5kg/30 lb
RMT-V1515	150 (5.90)	150 (5.90)	107.7 (4.24)				95 (3.74)		9.5kg/21 lb

※As for the handle, a hex wrench key is included. ※For higher accuracy, the work face needs to be re-ground.

Model EP-Q PERMANENT ELECTROMAGNETIC CHUCK FOR CUTTING

A Line-up of products selectable according to machining methods and workpieces.

- Considerable power saving and reduction in size of the Chuck Master by the renewed design.
- The detachable connector type is employed to respond to pallet changing.
- Electricity is used only when mounting and demounting workpieces. Workpieces can be held firmly in the event of power failure.
- Usable in wet machining operations.

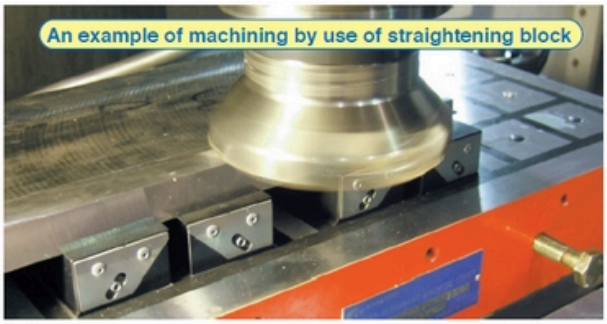

Model designation

Chuck size

CHUCK : EP-QN5-3060A

N……Normal (Ribs arranged between poles) Pole size
S……Strong (Poles arranged densely) (5…□50 7…□70)

A guide for selection

General milling	Planomiller, horizontal M/C, use of straightening blocks, etc.
Good holding conditions such as plate machining.	Poor holding conditions such as heavy duty cutting
↓	↓
QN	QS

Selection of pole size □50 or □70

- The □70 size is superior in the absolute holding power and gap characteristic.
- The □50 size is recommended for relatively small and thin workpieces. (The plate thickness of magnetic saturation is 20 to 25 mm for □50 and 30 to 35 mm for □70.)

Relation between chuck models and holding power

Comparison of holding power of chucks of same size

Holding power

□50 generates the max. holding power of 2.94 kN (300 kgf) or over per pole and □70 generates 5.88 kN (600 kgf) or over per pole.

〈An example of calculation〉
Max. holding power on whole attractive face of EP-QS5-4080A
2.94kN×60 (number of poles)=176.4kN [18000kgf]

<Ordering information>

- Sizes other than standard sizes are also available.
- Larger sizes are available in the form of linked chucks. Please contact us.
- Round chucks are also available.

- When workpieces are hardened steel or special steel, they may be difficult to demount due to strong residual magnetism. In these cases, Model EP-D (P. 34) is recommended.

EP-Q type holding power characteristic

1. Relation between workpiece thickness and holding power
Test piece held by 4 poles

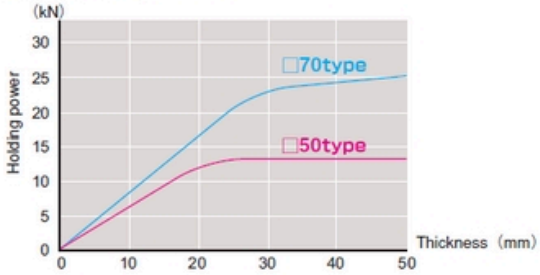

2. Relation between gap and holding power
Holding on whole face.

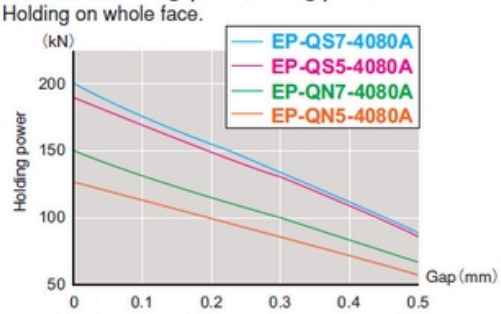

Model of special specification

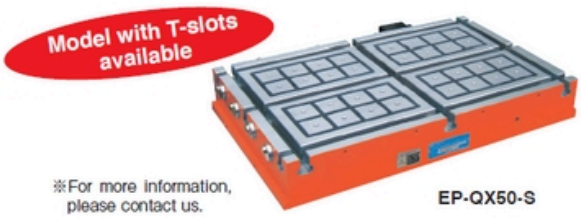

※For more information, please contact us.

EP-QX50-S

■EP-QN Series

EP-QN7-50100A

Chuck controller required additionally

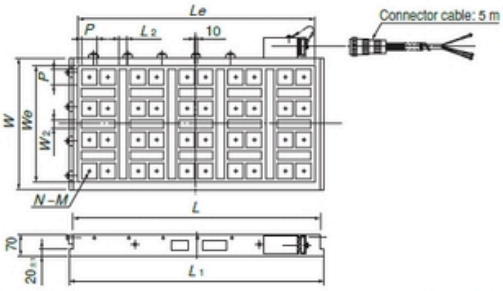

[mm (in)]

Standard Size Model		Work Face W	Work Face L	Pole Dimensions We	Pole Dimensions Le	Pole Dimensions No. of poles	Pole Dimensions P	Pole Dimensions W2	Pole Dimensions L2	Mounting Face L1	Tapped Hole on Attractive Face N	Tapped Hole on Attractive Face M	Mass	Applicable Chuck Master
EP-QN5	3060A	300 (11.8)	610 (24.0)	252 (9.92)	570 (22.4)	24	50 (1.96)	18 (0.70)	16 (0.63)	630 (24.8)	24	8 (0.31)	90kg/198 lb	EPS-P2100C P54–P58
	4080A	420 (16.5)	800 (31.5)	372 (14.6)	760 (29.9)	40		28 (1.10)	25 (0.98)	820 (32.2)	40		160kg/352 lb	
	50100A	500 (19.6)	960 (37.8)	432 (17.0)	917 (36.1)	60		18 (0.70)	26 (1.02)	980 (38.5)	60		230kg/507 lb	
	60100A	600 (23.6)		552 (21.7)		72		24 (0.94)			72		280kg/617 lb	
EP-QN7	4080A	390 (15.3)	800 (31.5)	332 (13.0)	760 (29.9)	24	70 (2.75)	28 (1.10)	24 (0.94)	820 (32.2)	24	10 (0.39)	150kg/330 lb	EPS-P2100C P54–P58
	50100A	500 (19.6)	1000 (39.4)	452 (17.8)	960 (37.8)	40			25 (0.98)	1020 (40.1)	40		240kg/529 lb	EPS-P2100C-2 P54–P58
	60100A	620 (24.4)		572 (22.5)		50					50		300kg/661 lb	

※Turning the permanent electromagnetic chucks on and off must be limited to once per several minutes. If on/off operations are repeated frequently, the chucks may be damaged by overheat.
※The chuck controller and clamp parts are not included. ※The KANETEC chucks work best when a KANETEC chuck controller is used.

■EP-QS Series

EP-QS5-3060A

Chuck controller required additionally

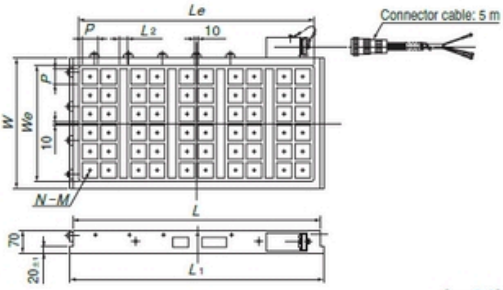

[mm (in)]

Standard Size Model		Work Face W	Work Face L	Pole Dimensions We	Pole Dimensions Le	Pole Dimensions No. of poles	Pole Dimensions P	Pole Dimensions L2	Mounting Face L1	Tapped Hole on Attractive Face N	Tapped Hole on Attractive Face M	Mass	Applicable Chuck Master
EP-QS5	3060A	300 (11.8)	610 (24.0)	252 (9.92)	570 (22.4)	32	50 (1.96)	16 (0.55)	630 (24.8)	32	8 (0.31)	90kg/198 lb	EPS-P2100C P54–P58
	4080A	420 (16.5)	800 (31.5)	372 (14.6)	760 (29.9)	60		25 (0.98)	820 (32.2)	60		160kg/352 lb	
	50100A	500 (19.6)	960 (37.8)	432 (17.0)	917 (36.1)	84		26 (1.02)	980 (38.5)	84		230kg/507 lb	EPS-P2100C-2 P54–P58
	60100A	600 (23.6)		552 (21.7)		108				108		280kg/617 lb	
EP-QS7	3060A	300 (11.8)	600 (23.6)	252 (9.92)	562 (22.1)	18	70 (2.75)	25 (0.98)	620 (24.4)	18	10 (0.39)	86kg/189 lb	EPS-P2100C P54–P58
	4080A	390 (15.3)	800 (31.5)	332 (13.0)	760 (29.9)	32		24 (0.94)	820 (32.2)	32		150kg/330 lb	
	50100A	470 (18.5)	1000 (39.4)	412 (16.2)	960 (37.8)	50		25 (0.98)	1020 (40.1)	50		220kg/485 lb	EPS-P2100C-2 P54–P58
	60100A	620 (24.4)		572 (22.5)		70				70		300kg/661 lb	

※Turning the permanent electromagnetic chucks on and off must be limited to once per several minutes. If on/off operations are repeated frequently, the chucks may be damaged by overheat.
※The chuck controller and clamp parts are not included. ※The KANETEC chucks work best when a KANETEC chuck controller is used.

[Application]
Suitable for securing workpieces during cutting on milling machines and machining centers.

[Features]
- ●The power cord is of detachable connector type for easy use. The connector cap is of waterproof type.
- ●Can be used in wet machining operations.
- ●The chuck is very thin, 70 mm in height, and light weight.
- ●Less accuracy change and highly rigid construction.
- ●Considerable power saving compared with conventional products. (□70: 50% reduction, □50: 70% reduction)
- ●Magnetization and demagnetization in a very short time.
- ●Tapped holes on the attractive face can be used to install various blocks to hold workpieces by various methods according to machining operations.
- ●Straightening blocks are also available that are mounted on the chuck work face to hold workpieces by an induction field. These optional products are very useful for workpieces having irregular attractive faces that for example have steps and distortion and for machining the bottom and side faces of workpieces. (See ■Options on page 32.)

■Options

Straightening block; for □50 and □70 (KT-Q)

KT-Q50M
(Movable)

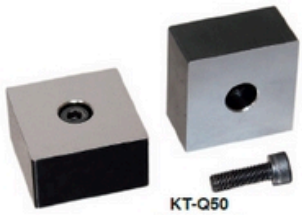

KT-Q50
(Stationary)

[mm (in)]

Model □50 (1.96) × H28 (1.10)	Model □70 (2.75) × H37 (1.45)	Type
KT-Q50	KT-Q70	Stationary
KT-Q50M	KT-Q70M	Movable

※The H dimension is the standard height.

Model EP-D DEMAGNETIZING FUNCTION-EQUIPPED PERMANENT ELECTROMAGNETIC CHUCK FOR CUTTING

Cutting | Power saving | Minimal heat generation | Environmentally friendly

Chuck controller required additionally

EP-D3060

Comparison of holding power

[Application]
Used for securing workpieces during cutting by milling machines, machining centers, etc.

[Features]
- A coil dedicated to demagnetization has significantly improved the workpiece release performance when the chuck is turned off.
- The magnetic pole arrangement to concentrate magnetism on the workpiece provides strong holding power.
- Hardened steel and special steel workpieces having large residual magnetism can be released quicker than the conventional chucks.
- Electricity is used only when mounting and demounting workpieces, thus minimal heat is generated and electricity is saved.
- Can be used in wet operations.

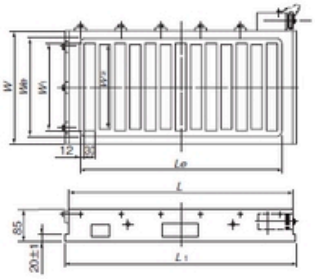

Comparison of residual holding power

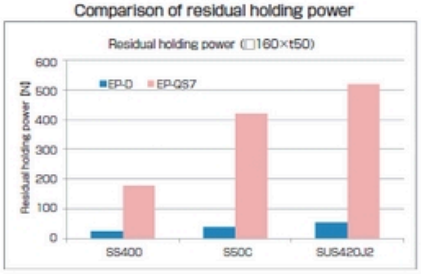

[mm (in)]

Model	Work Face		Dimensions				Mounting Face	Mass	Electro Chuck Master
	W	L	We	Le	W_1	W_2	L_1		
EP-D 3060	304 (11.9)	618 (24.3)	264 (10.3)	558 (21.9)	240 (9.44)	232 (9.13)	638 (25.1)	110kg/242 lb	EPS-D2100B P54–P58
EP-D 4080	404 (15.9)	786 (30.9)	364 (14.3)	726 (28.5)	340 (13.3)	332 (13.0)	806 (31.7)	185kg/407 lb	
EP-D50100	504 (19.8)	1038 (40.8)	464 (18.2)	978 (38.5)	440 (17.3)	432 (17.0)	1058 (41.6)	305kg/672 lb	EPS-D2100B-2 P54–P58
EP-D60100	604 (23.7)		564 (22.2)		540 (21.2)	532 (20.9)		360kg/793 lb	

※The chuck controller and clamp parts are not included. ※The KANETEC chucks work best when a KANETEC chuck controller is used.
※Turning the permanent electromagnetic chucks on and off must be limited to once per several minutes. If on/off operations are repeated frequently, the chucks may be damaged by overheat.

Model EP-QD DEMAGNETIZING FUNCTION-EQUIPPED PERMANENT ELECTROMAGNETIC CHUCK FOR CUTTING

Weakness of checker board pattern type permanent electromagnetic chucks overcome!

Cutting | Power saving | Minimal heat generation | Environmentally friendly

Chuck controller required additionally

EP-QD7-3469
(Mounting size equivalent to 400 × 800)

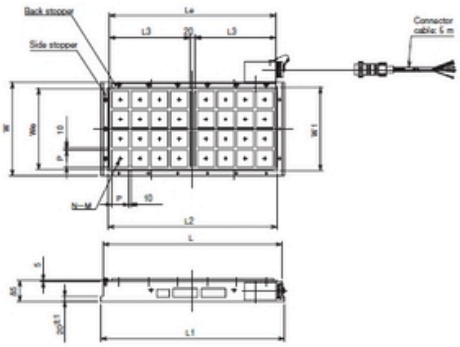

Holding power - thickness characteristic
(4-pole holding, SS400 ground surface)

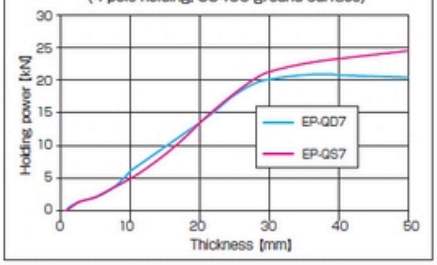

[Application]
Used for securing workpieces during cutting by milling machines, machining centers, etc.

[Features]
- An optimum combination of KANETEC' s original magnetic pole construction and a construction dedicated to demagnetization has reduced residual holding power significantly.
- Hardened steel and special steel workpieces having large residual magnetism can be released easily. (Compared with conventional EP-Q)
- The optional straightening block (KT-Q70/Q70M) can be used. By mounting various blocks using tapped holes on the attractive face, various securing methods can be utilized according to machining operations.
- Can be used in wet operations.
- Special types having four poles minimum are available.

[mm (in)]

Model	Mounting Size	Work Face				Pole Dimensions					Mounting Face	Height	Tapped Hole on Attractive Face		Mass	Electro Chuck Master
		W	W_1	L	L_2	We	Le	No.of Poles	P	L_3	L_1		N	M		
EP-QD7-2669	300 (11.8) × 800 (31.5)	300 (11.8)	260 (10.2)	730 (28.7)	690 (27.1)	250 (9.84)	680 (26.7)	24	70 (2.75)	330 (12.9)	750 (29.5)	85 (3.34)	24	10 (0.39)	125kg/275 lb	EPS-D2100B P54–P58
EP-QD7-3453	400 (15.7) × 600 (23.6)	380 (14.9)	340 (13.3)	570 (22.4)	530 (20.8)	330 (12.9)	520 (20.4)			250 (9.84)	590 (23.2)					
EP-QD7-3469	400 (15.7) × 800 (31.5)			730 (28.7)	690 (27.1)		680 (26.7)	32		330 (12.9)	750 (29.5)		32		160kg/352 lb	EPS-D2100B-2 P54–P58
EP-QD7-5069	550 (21.6) × 800 (31.5)	540 (21.2)	500 (19.6)			490 (19.2)		48					48		230kg/507 lb	

※The chuck controller and clamp parts are not included. ※The KANETEC chucks work best when a KANETEC chuck controller is used.
※Turning the permanent electromagnetic chucks on and off must be limited to once per several minutes. If on/off operations are repeated frequently, the chucks may be damaged by overheat.

Model EP-QS3 RECTANGULAR PERMANENT ELECTROMAGNETIC CHUCK

Very small magnetic pole type suitable for small and thin workpieces!

Chuck controller required additionally

EP-QS3-3060A

[Application]
Used for securing workpieces during cutting by milling machines, machining centers, etc.

[Features]
- Compared with conventional permanent electromagnetic chucks for cutting, this type has higher holding power on small and thin workpieces.
- Compared with conventional chucks, the residual holding power has been reduced to a third maximum.
- An original construction is employed to keep the height below 50 mm, thus realizing thin and light weight chucks.
- Electricity is supplied momentarily only when mounting and demounting workpieces, thus minimal heat is generated and highly precise machining can be expected. Also electricity is saved.
- Can be used in wet operations.
- The employment of a quick connector facilitates connection/removal of the cable.

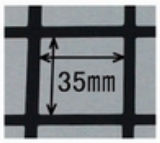

<Newly developed 35-mm square micro poles>

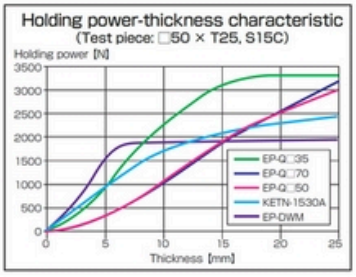

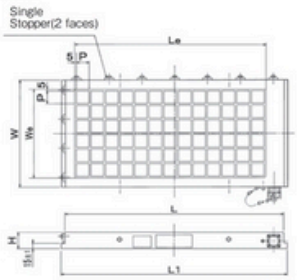

[mm (in)]

Model	Work Face		Pole Dimensions				Mounting Face		Height	Mass	Electro Chuck Master
	W	L	We	Le	No.of Poles	P	W	L_1	H		
EP-QS3-1732A	165 (6.49)	315 (23.6)	125 (4.92)	245 (9.64)	18	35 (1.37)	165 (6.49)	335 (13.1)	45 (1.77)	16kg/ 35 lb	EPS-P2100C P54–P56
EP-QS3-2040A	205 (8.07)	400 (15.7)	165 (6.49)	325 (12.7)	32		205 (8.07)	420 (16.5)		26kg/ 57 lb	
EP-QS3-3060A	295 (11.6)	600 (23.6)	245 (9.64)	525 (20.6)	78		295 (11.6)	620 (24.4)		56kg/123 lb	
EP-QS3-4282A	415 (16.3)	820 (32.2)	365 (14.3)	745 (29.3)	162		415 (16.3)	840 (33.0)	50 (1.96)	120kg/264 lb	EPS-P2100C-2 P54–P56

※The chuck controller and clamp parts are not included. ※The KANETEC chucks work best when a KANETEC chuck controller is used.
※Turning the permanent electromagnetic chucks on and off must be limited to once per several minutes. If on/off operations are repeated frequently, the chucks may be damaged by overheat.

You can watch video introducing rectangular magnetic chucks.

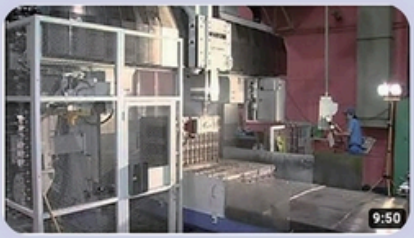

Permanent electromagnetic chuck for cutting EP-Q Series

Rectangular permanent electromagnetic chuck EP-QS3 Series

Demagnetizing function-equipped permanent electromagnetic chuck for cutting EP-D

Pursuing the possibility of machining by magnet + vacuum holding! [Non-magnetic material] [Cutting] [Grinding]

ROUND MAGNETIC CHUCKS

ROUND TYPE

P019 GRINDING Rotary grinder, cylindrical grinder

Electromagnetic	Permanent magnetic	Permanent electromagnetic
SR·····19	RMAW-C·····22	EPC-ARF·····23
BH·····19	RMCW·····22	
KEC-AR·····21	RMCB·····22	
KCC-AR·····21		

P023 TURNING & CUTTING Lathe, turning machine, compound lathe

Electromagnetic	Permanent magnetic	Permanent electromagnetic
KEC-AS·····23	RMA-C·····24	EPC-Z·····25
	RMC·····24	EPC-AST·····26
	RMC-X·····25	EP-DR·····26

Overview of Round Magnetic Chucks

Applications of round magnetic chucks

Round magnetic chucks are used on lathes, turning machines, rotary grinders, etc. In particular, these chucks are very useful where workpieces are distorted by mechanical chucking or many workpieces are to be ground on the rotary grinder simultaneously. These round magnetic chucks work effectively in reducing the setup time of large workpieces that require many mechanical clamps and in machining several faces by one chucking by securing the top face and sides freely.

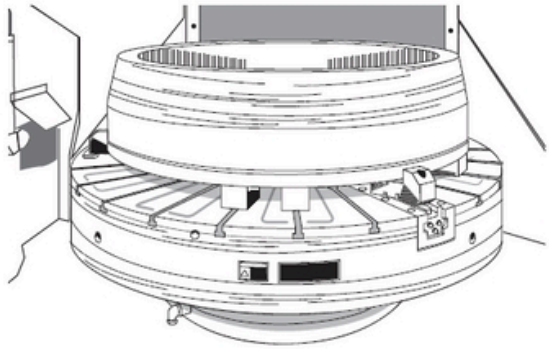

Two types of magnetic pole structure

The magnetic pole pattern of round magnetic chucks is largely classified into two types: ring-pole type and star-pole type. The ring-pole type has magnetic poles engraved in concentric circles and produces relatively uniform holding power over the enter surface, which makes this type suitable for grinding of plate-shaped workpieces. The star-pole type has radially zigzag patterns and is capable of distributing the magnetic field at relatively large pitches, which makes this type suitable for securing thick workpieces and ring-shaped workpieces. It works well not only in grinding but also cutting operation.

KEC-40ARE

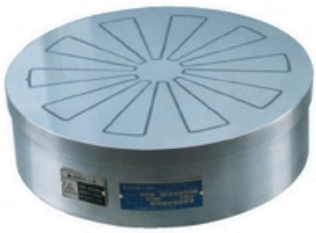

KEC-32ASE

〈Lathe wiring diagram〉

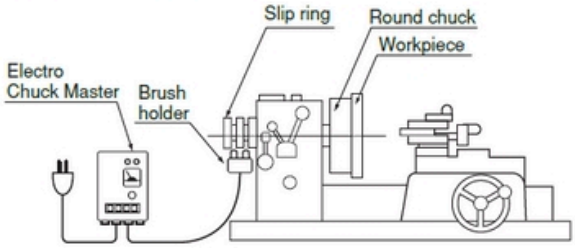

Feeder (optional)

This feeder is required to use the round electromagnetic chucks. Since the chuck itself is rotated, the feeder cable cannot be connected directly. For this reason, electricity is fed via a slip contact between the carbon brush on the power source side and the slip ring attached to the chuck.

•The φ24 mounting hole of the slip ring (SR-1) can be expanded up to φ40.

Slip ring Model SR-1

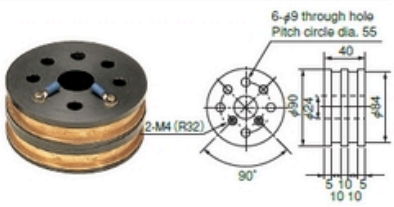

Brush holder Model BH-1A

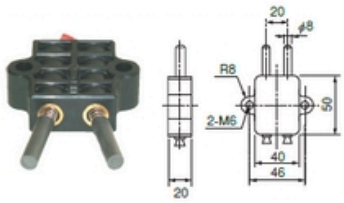

The reason why KANETEC's round magnetic chucks are chosen.

A wide variety of sizes

We meet customers' request for a wide variety of sizes with a wide range of chucks starting with small chucks for grinding of small workpieces that require severe precision to large chucks to fit a 1-m or larger table of vertical rotary grinders to machine large-size bearings, etc.

Advanced grooving technology

In order to ensure that uniform holding power, which is a feature of the ring-pole type, covers the whole use face, the magnetic pole pitches must be regularly arranged. If the magnetic pole patterns are not regularly arranged, uniform holding power cannot be obtained. KANETEC possesses this precise grooving technology, which enables us to provide high-quality ring-pole type magnetic chucks.

Patented ! Technology to control magnetic force of the permanent electromagnetic type

The round permanent electromagnetic chuck EPC-AST has a function realized by KANETEC's original technology to control the magnetic force at 16 steps from strong to weak. This technology can also be applied to the manufacture of large special chucks over φ1200.

We meet any demand for additional functions.

We meet any demand and request for adding holes for the purpose of facilitating centering of workpieces and making special products of special T-groove specifications.

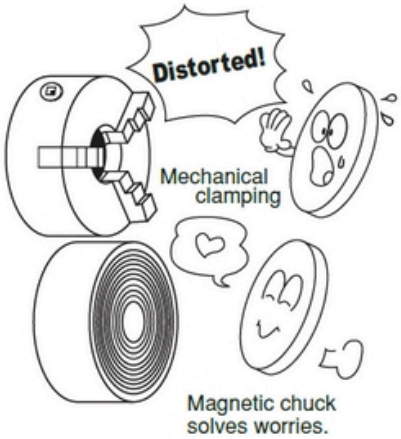

Topics

Consultation An example of Model EPC-120ARF special fabrication

Solving a problem of currently possessed round magnetic chucks.

When we talked with a customer who uses several KANETEC products, we asked "do you have any problems?" and the customer talked about problems concerning magnetic chucks.

Customer's worries	We feel that the magnetic force of the φ1200-mm round magnetic chuck used on a rotary grinder that we have been using for a long time is weak. However, it is old and we do not know the manufacturer and are in trouble with whom we could consult.
KANETEC's action	We reported to the customer that our Engineering Dept. and Quality Assurance Dept. conducted investigations and found that the chuck had been made by an overseas manufacturer.
Response from the customer	The customer told us that "Thank you for your effort. Then, can you quote a replacement chuck?" So, we quoted the round permanent electromagnetic chuck EPC-ARF, which was then newly put on the market. In terms of price, our price was higher, but we received a heartful comment "We highly evaluate KANETEC quality and are moved by your sincere action" and purchased one set of chucks. They were very satisfied "The holding power is sufficient!" and thereafter, they have contacted us for our advice and service occasionally.

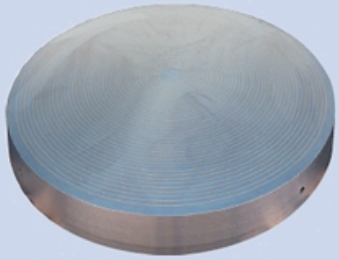

Photo for illustrative purpose.

A lineup of standard products starts on the next page.

※Please also use the Facsimile and Email Communication Forms at the end.

Model KEC-AR ROUND ELECTROMAGNETIC CHUCK

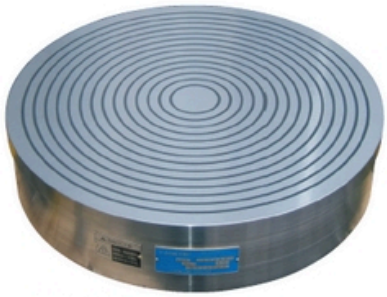

KEC-40ARE

Grinding

Environmentally friendly

[Application]
Suitable for grinding and cutting operations with the chuck mounted on such machine tools as rotary grinders, lathes, turning machines and rotary milling machines that rotate workpieces to machine. This model comes in two types; ring pole and star pole according to the patterns on the chuck work face. The ring pole type is used for general grinding operations and the star pole type for cutting operations also.

[Features]
- Relatively thin workpieces that are likely to be distorted by mechanical clamping can be held by uniform holding power of the ring pole type for highly precise machining.
- For such operations as cutting thick workpieces, the star pole type is recommended that generates strong holding power.

Chuck controller required additionally

Feeder required additionally (See below)

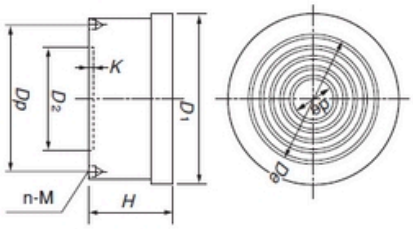

An example of installation on a vertical grinder

Ring-Pole Type

[mm (in)]

Model	Nominal Size	Work Face D_1	Work Face De	Work Face de	Pole Pitch	No. of Poles	Mounting Face D_2	Mounting Face K	Mounting Face n	Mounting Face M	Mounting Face Dp	Height H	Voltage	Current	Mass	Electro Chuck Master	Remarks
KEC- 10ARE	100 (3.93)	100 (3.93)	75 (2.95)	29 (1.14)	10(3+7) (0.39)	–	63 (2.48)	4 (0.15)	4 (0.15)	M 6 (0.23)	80 (3.15)	85 (3.34)	90 VDC	0.06A	4kg/ 8 lb	※ES-M103C ES-M305C EH-V305B EH-VE305B	※For types with a combination of a rectifier and demagnetizer, see pages of "Chuck Controllers." P54–P58
KEC- 16ARE	160 (6.29)	160 (6.29)	135 (5.31)				125 (4.92)			M 8 (0.31)	141 (5.55)			0.29A	12kg/26 lb		
KEC- 20ARE	200 (7.87)	200 (7.87)	161 (6.33)	35 (1.37)	12(3+9) (0.47)		160 (6.29)				178 (7.00)			0.26A	19kg/41 lb		
KEC- 25ARE	250 (9.84)	250 (9.84)	223 (8.77)	49 (1.92)			200 (7.87)			M10 (0.39)	224 (8.81)	90 (3.54)		0.52A	33kg/72 lb		
KEC- 32ARE	315 (12.4)	315 (12.4)	271 (10.6)				250 (9.84)				280 (11.0)			0.53A	52kg/114 lb		
KEC- 40ARE	400 (15.7)	400 (15.7)	367 (14.4)				315 (12.4)				355 (13.9)			1.10A	93kg/205 lb		
KEC- 50ARE	500 (19.6)	500 (19.6)	463 (18.2)				400 (15.7)			M12 (0.47)	450 (17.7)			1.85A	130kg/286 lb		
KEC- 63ARE	630 (24.8)	630 (24.8)	583 (22.9)				500 (19.6)				560 (22.0)			3.10A	190kg/418 lb	Above models except for the one marked by ※.	
KEC- 80ARE	800 (31.5)	800 (31.5)	748 (29.4)	70 (2.75)	14(3+11) (0.55)		630 (24.8)		8 (0.31)		710 (27.9)	110 (4.33)		5.10A	370kg/815 lb	EH-VE210E	
KEC-100ARE	1000 (39.4)	1000 (39.4)	944 (37.1)				800 (31.5)			M16 (0.62)	900 (35.4)			6.55A	580kg/1278 lb		

Model KCC-AR WATER-COOLED ROUND ELECTROMAGNETIC CHUCK

KCC-35AR

Grinding

Water cooled

[Application]
Suitable for grinding by rotary grinders.

[Features]
- Very little accuracy change. KANETEC's unique cooling mechanism minimizes temperature rise. Deformation of the chuck is minimized, thus making it most suitable for high precision grinding operations.

Chuck controller required additionally

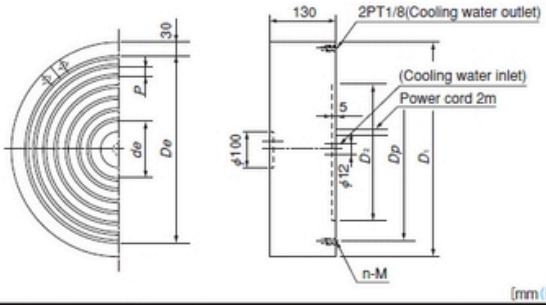

[mm (in)]

Model	Nominal Size	Work Face D_1	Work Face De	Work Face de	Pole Pitch P	Mounting Face D_2	Mounting Face Dp	Mounting Face M	Mounting Face n	Height	Voltage	Current	Mass	Electro Chuck Master	Remarks
KCC-35AR	350 (13.7)	350 (13.7)	316 (12.4)	145 (5.70)	14(3+11) (0.55)	200 (7.87)	250 (9.87)	M10 (0.39)	4 pcs	130 (5.11)	90 VDC	0.75A	82kg/ 180 lb	ES-M103C ES-M305C EH-V305B EH-VE305B	※For types with a combination of a rectifier and demagnetizer, see pages of "Chuck Controllers." P54–P58
KCC-40AR	400 (15.7)	400 (15.7)	341 (13.4)	139 (5.47)		250 (9.87)	300 (11.8)					1.00A	108kg/238 lb		
KCC-50AR	500 (19.6)	500 (19.6)	441 (17.3)	183 (7.20)		350 (13.7)	400 (15.7)	M12 (0.47)				1.70A	168kg/370 lb		
KCC-60AR	600 (23.6)	600 (23.6)	541 (21.3)	171 (6.73)		450 (17.7)	500 (19.6)					2.30A	250kg/551 lb		
KCC-70AR	700 (27.5)	700 (27.5)	641 (25.2)	159 (6.26)		550 (21.6)	600 (23.6)		8 pcs			3.20A	330kg/727 lb	Above models except for the one marked by ※.	
KCC-80AR	800 (31.5)	800 (31.5)	741 (29.1)	147 (5.78)		650 (25.5)	700 (27.5)					3.90A	430kg/948 lb		

※A cooler unit is required additionally. ※If the magnetic force needs not be adjusted, use ES-M.
※The chuck controller and clamp parts are not included. The KANETEC chucks work best when a KANETEC chuck controller is used.

Model RMAW-C ROUND PERMANENT MAGNETIC CHUCK

Grinding

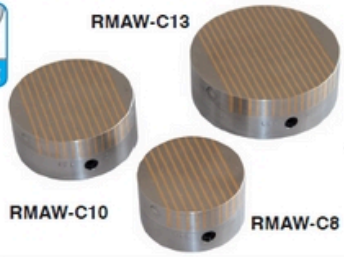

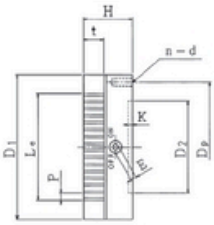

[Application]
Used for holding small and thin workpieces in grinding operations on grinders.

[Features]
- Theses chucks firmly hold small and thin workpieces of 3 mm in plate thickness or less.
- While the sizes are the same as conventional chucks, these chucks produce holding power that is about twice as powerful.
- These chucks also offer superior holding performance to conventional chucks on hardened parts used in molds.
- The gap performance is also excellent to reduce influence of flatness and roughness of workpiece attractive faces.
- These are of powerful round type to enable them to be used on light-duty cutting on lathes also.

[mm (in)]

Model	Nominal Size	Work Face		Mounting Face					Pole Pitch	Face Plate Thickness	Height	Handle Hole	Mass
		D_1	L_e	D_2	K	Dp	n	d	P	t	H	E	
RMAW-C8	80 (3.14)	80 (3.14)	56 (2.20)	40 (1.57)	4 (0.15)	65 (2.55)	3 (0.11)	M 6 (0.23)	6(2+4) 0.23 (0.07+0.15)	18 (0.70)	43 (1.69)	5 (0.19)	1.6kg/ 3.52 lb
RMAW-C10	100 (3.93)	100 (3.93)	74 (2.91)	60 (2.36)		76 (2.99)							2.5kg/ 5.51 lb
RMAW-C13	125 (4.92)	125 (4.92)	92 (3.62)	80 (3.14)		112 (4.40)	4 (0.15)						3.9kg/ 8.59 lb

※A hex wrench key is included.

Model RMCW ROUND PERMANENT MAGNETIC MICROPITCH CHUCK

Grinding

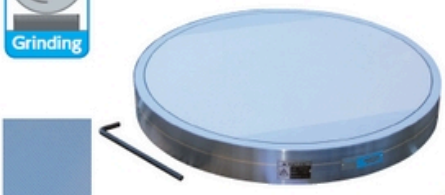

Surface pole pattern

RMCW-50B

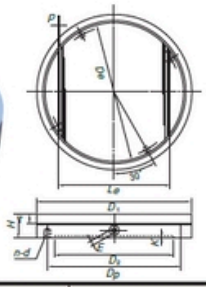

[Application]
Suitable for grinding a wide range of workpieces, small and large, thin and thick on grinders. Since these chucks are thin, they can be used in a wide range of applications including securing workpieces temporarily.

[Features]
- Thin; 43 mm to 60 mm.
- Micro pole pitch; can be used with any sizes of workpieces, small and large and thin and thick.
- The handle is a hex wrench key. It can be operated lightly. A half turn turns on and off the magnetic force.
- The changeover handle can be set at an angle to generate a weak magnetic force for easy temporary positioning of workpieces.

[mm (in)]

Model	Nominal Size	Work Face			Pole Pitch	Mounting Face					Face Plate Thickness	Height	Handle Hole	Mass
		D_1	De	Le	P	D_2	K	Dp	n	d	L_e	H_1		
RMCW- 6C	60 (2.36)	60 (2.36)	51 (2.00)	38 (1.49)	2.5 (0.5+2) (0.09)	30 (1.18)	2 (0.07)	44 (1.73)	2 (0.07) ※1	M 6 (0.23)	18 (0.70)	43 (1.69)	Hex. 8 (0.31)	1kg/ 2 lb
RMCW-16B	160 (6.29)	160 (6.29)	134 (5.27)	88 (3.46)	3(1+2) (0.11)	125 (4.92)		140 (5.51)	4 (0.15)	M 8 (0.31)				6.5kg/ 14 lb
RMCW-20B	200 (7.87)	200 (7.87)	172 (6.77)	121 (4.76)		160 (6.29)		180 (7.08)						10kg/ 22 lb
RMCW-25B	250 (9.84)	250 (9.84)	220 (8.66)	184 (7.24)		200 (7.87)		224 (8.81)		M10 (0.39)				15kg/ 33 lb
RMCW-30B	300 (11.8)	300 (11.8)	272 (10.7)	220 (8.66)		230 (9.05)	3 (0.11)	260 (10.2)				45 (1.77)		25kg/ 56 lb
RMCW-40B	400 (15.7)	400 (15.7)	370 (14.5)	319 (12.5)		315 (12.4)		355 (13.9)						45kg/ 99 lb
RMCW-50B	500 (19.6)	500 (19.6)	466 (18.3)	358 (14.1)		350 (13.7)		400 (15.7)		M12 (0.47)	25 (0.98)	60 (2.36)		90kg/198 lb
RMCW-60B	600 (23.6)	600 (23.6)	566 (22.2)	457 (18.0)		450 (17.7)		500 (19.6)						115kg/253 lb

※1…For the location of mounting holes of 6C, please contact us. ※As for the handle, a hex wrench key is included.

Model RMCB ROUND PERMANENT MAGNETIC CHUCK WITH TAPPED HOLE IN CENTER OF FACE PLATE

Round permanent magnetic chucks with a tapped hole for easy mounting of various jigs/fixtures introduced!

Grinding

Cutting

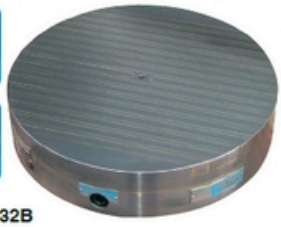

RMCB-32B

Tapped hole in center

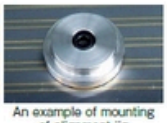

An example of mounting of alignment jig

[Application]
Permanent magnetic chucks to hold workpieces during grinding operations on rotary grinders, cylindrical grinders, internal grinders and cutting operations on lathes.

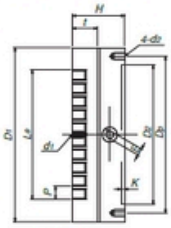

(Fig.1)

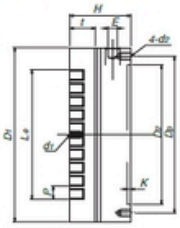

(Fig.2)

[Features]
- Two types; standard type and magnetic force adjust type are available.
- As a standard feature, a tapped hole is provided in the center of the attractive face. This facilitates mounting of jigs/fixtures for workpiece alignment.
  ※The tapped hole in the center is allowed to be M10 max. for the chuck size φ160 and M12 max. for φ200 or over. (For the φ125 size only, a tapped hole must not be worked on.)
- There is a 9-mm additional work allowance from the attractive face, which allows additional work according to jigs/fixtures.
- The permanent magnetic chucks that do not require electricity can be mounted easily without troublesome wiring. They also contribute to energy saving.

[mm (in)]

Model		Fig		Nominal Size	Work Face		Pole Pitch	Mounting Face				Face Plate Thickness	Height H		Tapped Hole in Center	Handle Hole E		Mass	
Standard	Mag. force adjust	Standard	Mag. force adjust		D_1	Le	P	D_2	K	Dp	d2	t	Standard	Mag. force adjust	d_1	Standard	Mag. force adjust	Standard	Mag. force adjust
RMCB-13	RMCB-13B	1	2	125 (4.92)	125 (4.92)	88 (3.46)	15.2 (1.5+9+1.5+3.2) 0.59 (0.05+0.35+0.05+0.12)	100 (3.93)	4 (0.15)	112 (4.40)	M 6 (0.23)	29 (1.14)	60 (2.36)	70 (2.75)	M6 (0.23) Depth12 (0.47)	Hex. 8 (0.31)	□8 (0.31)	5kg/ 11.0 lb	7kg/ 15.4 lb
RMCB-16	RMCB-16B			160 (6.29)	160 (6.29)	118 (4.64)		125 (4.92)		140 (5.51)	M 8 (0.31)				M8 (0.31) Depth12 (0.47)			8kg/ 17.6 lb	10kg/ 22.0 lb
RMCB-20	RMCB-20B			200 (7.87)	200 (7.87)	149 (5.86)		160 (6.29)		180 (7.08)								13kg/ 28.6 lb	16kg/ 35.2 lb
RMCB-25	RMCB-25B			250 (9.84)	250 (9.84)	194 (7.63)		200 (7.87)		224 (8.81)	M10 (0.39)							21kg/ 46.3 lb	25kg/ 55.1 lb
RMCB-32	RMCB-32B			315 (12.4)	315 (12.4)	255 (10.0)		250 (9.84)		280 (11.0)							□10 (0.39)	31kg/ 68.3 lb	37kg/ 81.5 lb
RMCB-40	RMCB-40B			400 (15.7)	400 (15.7)	331 (13.0)		315 (12.4)		355 (13.9)								51kg/ 112.4 lb	67kg/ 147.7 lb

※ As for the handle, a hex wrench key is included with Standard Models RMCB-13 to 20, and a special changeover handle is included with Models RMCB-25 and above. A T-handle is included with the magnetic force adjust types.

Model EPC-ARF ROUND PERMANENT ELECTROMAGNETIC CHUCK

Highly precise rotary grinding operations realized!

Grinding | Power saving | Minimal heat generation | Environmentally friendly

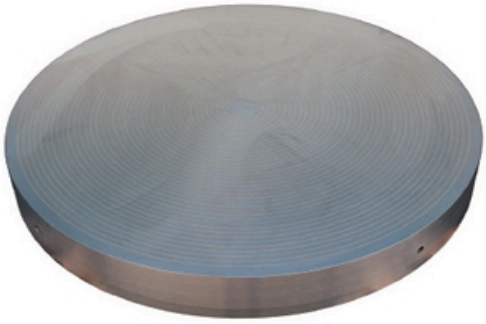

Ring-pole type
EPZ-120ARF

Chuck controller required additionally

[Application]
Most suitable for grinding operations by rotary grinders.

[Features]
- Since electricity needs not be supplied continuously (momentarily supplied only when mounting and demounting workpieces), heat generation and thermal deformation are minimal, thus highly precise machining operations are possible. Also, the running cost is very low and electricity can be saved.
- The holding power is maintained by the permanent magnet in the case of such troubles as power failure and cable breakage to enhance safe operations.
- In addition to four standard sizes, sizes of φ500 mm minimum and up to φ 1500 mm are available.
- Can be used in wet operations.
- A resin-bonded structural face plate having little environmental burden is employe '

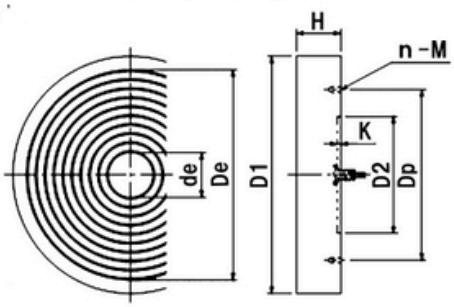

[mm(in)]

Model	Nominal Size	Work Face D_1	Work Face De	Work Face de	Pole Pitch	Mounting Face D_k	Mounting Face K	Mounting Face n	Mounting Face M	Mounting Face Dp	Height H	Voltage	Mass	Electro Chuck Master
EPC- 63ARF	630(24.8)	630(24.8)	580(22.8)	100(3.93)	14(2+12) 0.55 (0.07+0.47)	300(11.8)	4(0.15)	5	M12 (0.47)	500(19.6)	120 (4.72)	180 VDC	250kg/ 551 lb	EPS-GWB230A P57
EPC- 80ARF	800(31.4)	800(31.4)	748(29.4)			400(15.7)		6		650(25.5)			410kg/ 904 lb	
EPC-103ARF	1030(40.5)	1030(40.5)	976(38.4)	104(4.09)		550(21.6)		8		850(33.4)			680kg/1499 lb	
EPC-120ARF	1200(47.2)	1200(47.2)	1144(45.0)			600(23.6)				1000(39.3)			930kg/2050 lb	

※The chuck controller is not included. ※The slip ring(SR-1) and carbon brush(BH-1A-8A) are optional.

Model KEC-AR/AS ROUND ELECTROMAGNETIC CHUCK

Grinding | Cutting | Environmentally friendly

KEC-32ASE

Chuck controller required additionally

Feeder required additionally (See below)

[Application]
Suitable for grinding and cutting operations with the chuck mounted on such machine tools as rotary grinders, lathes, turning machines and rotary milling machines that rotate workpieces to machine. This model comes in two types; ring pole and star pole according to the patterns on the chuck work face. The ring pole type is used for general grinding operations and the star pole type for cutting operations also.

[Features]
- Relatively thin workpieces that are likely to be distorted by mechanical clamping can be held by uniform holding power of the ring pole type for highly precise machining.
- For such operations as cutting thick workpieces, the star pole type is recommended that generates strong holding power.

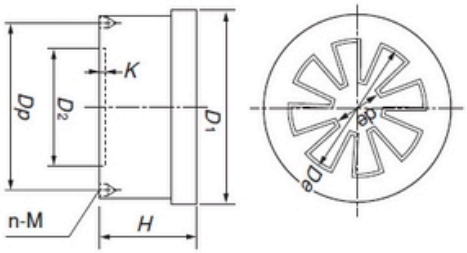

Star-Pole Type

[mm(in)]

Model	Nominal Size	Work Face D_1	Work Face De	Work Face de	Pole Pitch	No. of Poles	Mounting Face D_k	Mounting Face K	Mounting Face n	Mounting Face M	Mounting Face Dp	Height H	Voltage	Current	Mass	Electro Chuck Master	Remarks
KEC- 10ASE	100 (3.93)	100 (3.93)	75 (2.95)	29 (1.14)	–	8	63 (2.48)	4 (0.15)	4 (0.15)	M 6 (0.23)	80 (3.15)	85 (3.34)	90 VDC	0.04A	4.2kg/ 9 lb	※ES-M103C ES-M305C EH-V305B EH-VE305B	※For types with a combination of a rectifier and demagnetizer, see pages of "Chuck Controllers." P54–P58
KEC- 16ASE	160 (6.29)	160 (6.29)	135 (5.31)				125 (4.92)			M 8 (0.31)	140 (5.51)			0.08A	12kg/ 26 lb		
KEC- 20ASE	200 (7.87)	200 (7.87)	161 (6.33)	40 (1.57)			160 (6.29)				178 (7.00)			0.13A	19kg/ 41 lb		
KEC- 25ASE	250 (9.84)	250 (9.84)	223 (8.77)	49 (1.92)			200 (7.87)			M10 (0.39)	224 (8.81)	90 (3.54)		0.40A	33kg/ 72 lb		
KEC- 32ASE	315 (12.4)	315 (12.4)	271 (10.6)			10	250 (9.84)				280 (11.0)			0.44A	52kg/ 114 lb		
KEC- 40ASE	400 (15.7)	400 (15.7)	367 (14.4)				315 (12.4)				355 (13.9)			0.68A	93kg/ 205 lb		
KEC- 50ASE	500 (19.6)	500 (19.6)	463 (18.2)				400 (15.7)			M12 (0.47)	450 (17.7)			1.00A	145kg/ 319 lb		
KEC- 63ASE	630 (24.8)	630 (24.8)	583 (22.9)				500 (19.6)				560 (22.0)			1.28A	190kg/ 418 lb		
KEC- 80ASE	800 (31.5)	800 (31.5)	748 (29.4)	70 (2.75)		12	630 (24.8)		8 (0.31)		710 (27.9)	110 (4.33)		1.88A	370kg/ 815 lb		
KEC-100ASE	1000 (39.4)	1000 (39.4)	944 (37.1)				800 (31.5)			M16 (0.62)	900 (35.4)			3.92A	580kg/ 1278 lb	Above models except for the one marked by ※.	

※If the magnetic force needs not be adjusted, use ES-M. ※The chuck controller and clamp parts are not included. The KANETEC chucks work best when a KANETEC chuck controller is used.

Model RMA-C POWERFUL ROUND PERMANENT MAGNETIC CHUCK

Cutting

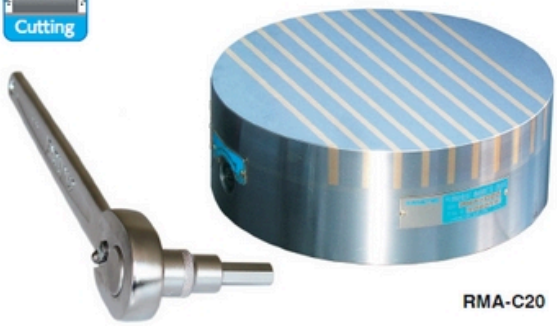

RMA-C20

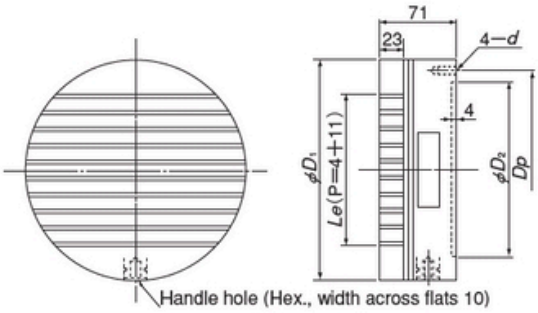

[Application]
Strong holding power for various cutting applications.

[Features]
- The magnetic force adjust feature ensures efficient positioning of workpieces for machining by a lathe.
- An easy-to-operate ratchet handle is employed for ON-OFF operation.
- Holding power 1.5 times greater than that of conventional models.

Relation between handle turning angle and holding power
(in the center of the attractive face)

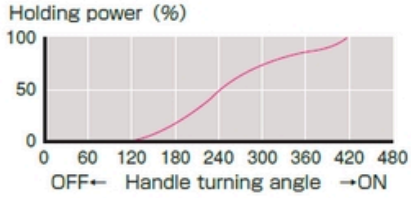

[mm (in)]

Model	Nominal Size	Work Face D_1	Work Face Le	Mounting Face D_2	Mounting Face Dp	Mounting Face d	Mass
RMA-C16	160 (6.29)	160 (6.29)	109 (4.29)	125 (4.92)	140 (5.51)	M8 (0.31)	11kg/ 24.2 lb
RMA-C20	200 (7.87)	200 (7.87)	139 (5.47)	160 (6.29)	180 (7.08)		17kg/ 37.4 lb
RMA-C25	250 (9.84)	250 (9.84)	184 (7.24)	200 (7.87)	224 (8.81)	M10 (0.39)	27kg/ 59.5 lb
RMA-C32	315 (12.4)	315 (12.4)	244 (9.60)	250 (9.84)	280 (11.0)		43kg/ 94.8 lb
RMA-C40	400 (15.7)	400 (15.7)	319 (12.5)	315 (12.4)	355 (13.9)		69kg/ 152 lb

※The ratchet handle (with socket) is included.

Model RMC POWERFUL ROUND PERMANENT MAGNETIC CHUCK

"B" is magnetic force adjust type.

Grinding

Cutting

RMC-32

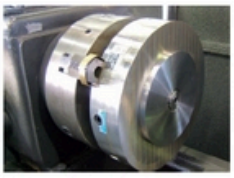

<An example of machining on lathe>

[Application]
Permanent magnetic chucks using a high-performance magnet for grinding operations on rotary grinders, cylindrical grinders, internal grinders and cutting operations on lathes.

[Features]
- The "B" type can be used in such a way that it first holds a workpiece by a weak magnetic force and after finely adjusting its holding position, it is changed to a strong magnetic force to secure the workpiece firmly.
- Can be used for both grinding and cutting operations.
- Work well on thin workpieces to thick workpieces.
- Highly precise chucks with little accuracy change.

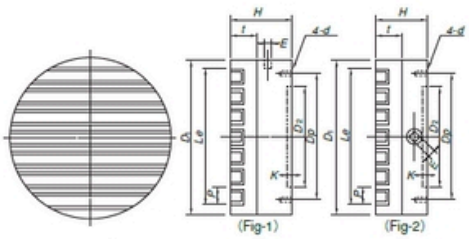

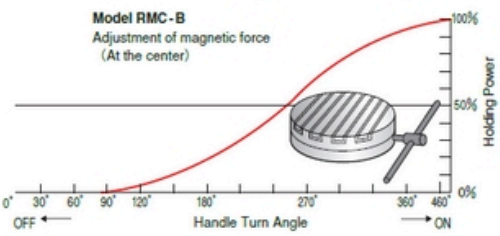

[mm (in)]

Model	Fig.	Nominal Dimensions	Top Plate D_1	Top Plate Le	Pole Pitch P	Bottom Plate D_2	Bottom Plate K	Bottom Plate Dp	Bottom Plate d	Face Plate Thickness t	Height H	Handle Hole E	Mass
RMC-13	1	125 (4.92)	125 (4.92)	88 (3.46)	15.2 (1.5+3.2+1.5+9) 0.59 (0.05+0.12+0.05+0.35)	100 (3.93)	4 (0.15)	112 (4.40)	M 6 (0.23)	24 (0.94)	55 (2.16)	Hexagon 8 (0.31)	4.5kg/ 10 lb
RMC-16		160 (6.29)	160 (6.29)	118 (4.64)		125 (4.92)		140 (5.51)	M 8 (0.31)				7.5kg/ 16 lb
RMC-20		200 (7.87)	200 (7.87)	149 (5.86)		160 (6.29)		180 (7.08)					12kg/ 26 lb
RMC-25		250 (9.84)	250 (9.84)	194 (7.63)		200 (7.87)		224 (8.81)	M10 (0.39)				18kg/ 40 lb
RMC-32		315 (12.4)	315 (12.4)	255 (10.0)		250 (9.84)		280 (11.0)					29kg/ 64 lb
RMC-40		400 (15.7)	400 (15.7)	331 (13.0)		315 (12.4)		355 (13.9)					47kg/ 104 lb

※As for handle, hexagonal wrench key is provided for model RMC-13 thru RMC-20, and special handle is supplied for model RMC-25 and above.

RMC-18B	2	125 (4.92)	125 (4.92)	88 (3.46)	15.2 (1.5+3.2+1.5+9) 0.59 (0.05+0.12+0.05+0.35)	100 (3.93)	4 (0.15)	112 (4.40)	M 6 (0.23)	24 (0.94)	65 (2.55)	□ 8 (0.31)	6kg/ 13 lb
RMC-16B		160 (6.29)	160 (6.29)	118 (4.64)		125 (4.92)		140 (5.51)	M 8 (0.31)				9kg/ 20 lb
RMC-20B		200 (7.87)	200 (7.87)	149 (5.86)		160 (6.29)		180 (7.08)					15kg/ 33 lb
RMC-25B		250 (9.84)	250 (9.84)	194 (7.63)		200 (7.87)		224 (8.81)	M10 (0.39)				23kg/ 51 lb
RMC-32B		315 (12.4)	315 (12.4)	255 (10.0)		250 (9.84)		280 (11.0)				□10 (0.39)	35kg/ 77lb
RMC-40B		400 (15.7)	400 (15.7)	331 (13.0)		315 (12.4)		355 (13.9)					62kg/ 137 lb

※The magnetic force is turned on and off with the T-shape handle (accessory)for the scroll chuck.

Model RMC-X STAR-POLE ROUND PERMANENT MAGNETIC CHUCK

This chuck supports strongly bearing process.

Grinding Cutting

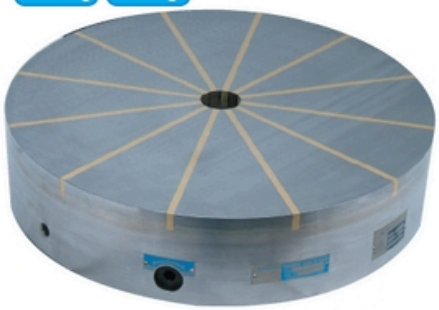

RMC-X40

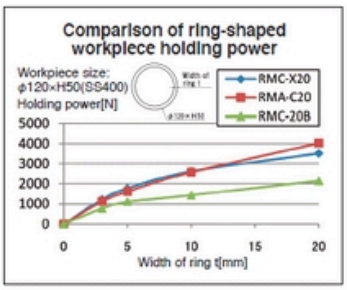

[Application]
Permanent magnetic chucks for securing ring-shaped workpieces on lathes and vertical combined grinding machines.

[Features]
- The star-pole construction generates a strong magnetic force that works well on ring-shaped workpieces such as bearings.
- The permanent magnetic chucks that do not require electricity can be mounted easily without troublesome wiring. They also contribute to energy saving.
- Usable in wet conditions.
- Model RMC-X-B chucks are equipped with a magnetic force adjust function.(The ON-OFF operating angle is about 630 degrees and the magnetic force is adjusted according to the handle turning angles.)

[mm (in)]

Model		Work Face				Mounting Face				Height H		Handle Hole E		Mass	
Standard	Mag. force adjust	D_1	D_2	P	No. of poles "n"	D_3	K	Dp	d	Standard	Mag.force adjust	Standard	Mag.force adjust	Standard	Mag.force adjust
RMC-X15	—	150 (5.90)	30 (1.18)	6 (0.23)	10	110 (4.33)	4 (0.15)	130 (5.11)	M8 (0.31)	74 (2.91)	–	8 (0.31)	–	Approx. 9 kg/19.8 lb	–
RMC-X20	RMC-X20B	200 (7.87)				160 (6.29)		180 (7.08)			84 (3.30)		8 (0.31)	Approx. 16kg/35.2 lb	Approx. 18kg/39.6 lb
RMC-X30	RMC-X30B	300 (11.8)	40 (1.57)		12	230 (9.05)		260 (10.2)	M10 (0.39)	89 (3.50)	94 (3.70)			Approx. 42kg/92.6 lb	Approx. 43kg/94.7 lb
RMC-X40	RMC-X40B	400 (15.7)				315 (12.4)		355 (13.9)					10 (0.39)	Approx. 83kg/182 lb	Approx. 90kg/198 lb
RMC-X50	—	500 (19.6)	130 (5.11)		24	400 (15.7)		450 (17.7)	M12 (0.47)	117 (4.60)	–	10 (0.39)	–	Approx. 160kg/352 lb	–
RMC-X60	—	600 (23.6)	180 (7.08)			450 (17.7)		520 (20.4)						Approx. 230kg/507 lb	–

※A ratchet type handle (with socket) is included.

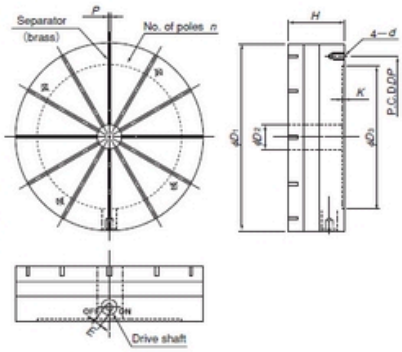

Model EPC-Z POWERFUL ROUND PERMANENT ELECTROMAGNETIC CHUCK

Construction machinery / Ship building / Nuclear power plant / Wind power generation
Highly precise machining of ring-shaped workpiece such as bearings!

Grinding Cutting

Environmentally friendly

Power saving

Minimal heat generation

Chuck controller required additionally

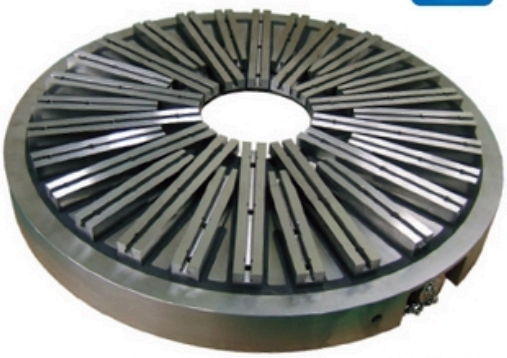

EPC-Z90

[Application]
Suitable for machining of ring-shaped workpieces such as bearings while rotating them on lathes and cylindrical grinders.

[Features]
- The employment of a magnetic pole construction suitable for cutting has increased the holding power. Suitable for cutting operations where large load is applied.
- The rectangular magnetic poles provide consistent holding power regardless of workpiece sizes.
- By using included blocks with T-grooves and adapter blocks, various workpieces, small and large, can be held.
- By mounting blocks, workpieces can be machined while being lifted. This feature enables it to machine workpieces from any direction. Also removal of chips and maintenance are easy.

[mm (in)]

Model	Dimensions	No.of ZPoles	Applicable Workpiece Diameter		Mass	Electro Chuck Master
			Min. dia.	Max. dia.		
EPC-Z90	φ 950 (37.4) × 90 (3.54)	28 (14+14)	250 (9.84)	900 (35.4)	410kg/ 904 lb	EPS-PZ2100A-4

※The chuck controller is not included.
※The power is supplied through the metal connector (with cable connection confirmation signal) on the side of the chuck.

<Chuck controller>

[mm (in)]

Model	Power Source	Output		Breaker Capacity	Dimensions			Mass
		Voltage	Current		Width	Height	Depth	
EPS-PZ2100A-4	200 VAC (50/60Hz) 1 φ	90 VDC × 4 times switching	Pulse 100 A (per switching)	60A	650 (25.5)	750 (29.5)	250 (9.84)	35kg/77.1 lb

Model EPC-AST ROUND PERMANENT ELECTROMAGNETIC CHUCK

Revolutionary permanent electromagnetic chuck! Magnetic force adjustable!

Patented

Grinding | Cutting | Power saving | Minimal heat generation

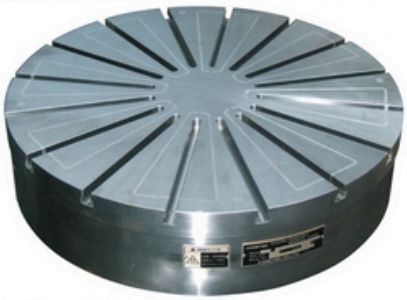

EPC-50AS-S
<An example of special fabrication>

Chuck controller required additionally

Environmentally friendly

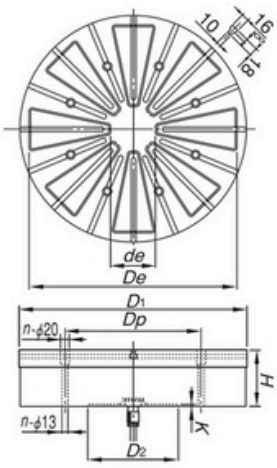

[Application]
Suitable for machining of ring-shaped workpieces such as bearings while rotating them on lathes, turning machines, cylindrical grinders and rotary grinders.

[Features]
- When used in combination with a dedicated controller equipped with a magnetic force adjust function, the magnetic force can be adjusted between strong and weak.
- Since internal heat generation and thermal distortion are minimal, highly precise machining is possible.
- Can be used in wet operations.
- These chucks are provided with T-grooves to make them suitable for various workpieces.

A size φ 1200 and larger is also available.

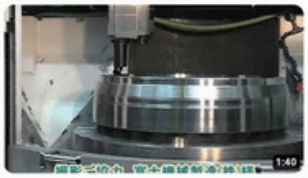

Here is the video

[mm(in)]

Model	Nominal Size	Work Face D_1	Work Face De	Work Face de	No. of Poles	Mounting Face D_2	Mounting Face K	Mounting Face n	Mounting Face Dp	Height H	Voltage	Current	Mass	Electro Chuck Master
EPC- 50AST	500(19.6)	500(19.6)	460(18.1)	100(3.93)	8	200(7.87)	5(0.19)	8	300(11.8)	125(4.92)	180 VDC	27A	Approx. 140kg/ 308 lb	EPS-RW230A
EPC- 70AST	700(27.5)	700(27.5)	656(25.8)	120(4.72)		400(15.7)			500(19.6)	130(5.11)		32A	Approx. 330kg/ 727 lb	EPS-RW250A
EPC- 90AST	900(35.4)	900(35.4)	850(33.4)	200(7.87)	12	500(19.6)		12	700(27.5)	140(5.51)		45A	Approx. 600kg/1323 lb	
EPC-120AST	1200(47.2)	1200(47.2)	1150(45.2)	300(11.8)	18	650(25.5)	6(0.23)	18	1000(39.4)	150(5.90)		60A	Approx. 1100kg/2425 lb	EPS-RW275A

※The chuck controller is not included.
※The slip ring (carbon brush included) is optional. The brush holder support bar for the slip ring should be provided by the user.
※Turning the permanent electromagnetic chucks on and off must be limited to once per several minutes. If on/off operations are repeated frequently, the chucks may be damaged by overheat.

※Dedicated operation box (Size 140×70×155,cord 5 m) included.

[mm(in)]

Model	Power Source	Output Voltage	Output Current	Dimensions Width	Dimensions Height	Dimensions Depth	Mass
EPS-RW230A	Single-phase 200 VAC (50/60Hz)	180 VDC (16 steps)	30A	400(15.7)	480(18.8)	190(7.48)	Approx. 15kg/33.0 lb
EPS-RW250A			50A		725(28.5)	250(9.84)	Approx. 35kg/77.1 lb
EPS-RW275A			75A				

Model EP-DR DEMAGNETIZING FUNCTION-EQUIPPED ROUND PERMANENT ELECTROMAGNETIC CHUCK

Grinding | Cutting

Environmentally friendly

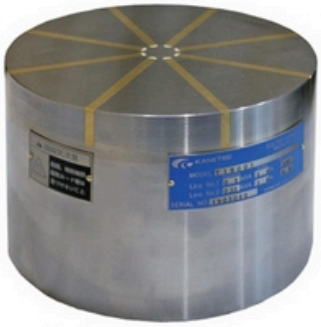

EP-DR20

New series introduced to round permanent electromagnetic chucks for cutting! Workpiece release performance improved and downsizing realized!

[Application]
Suitable for cutting of ring-shaped workpieces such as bearings.

[Features]
- A coil dedicated to demagnetization has significantly improved the workpiece release performance when the chuck is turned off.
- Downsizing that was difficult with conventional models due to the structure has been realized by optimizing the internal structure.
- The magnetic force generated in the central area of the chuck enables it to firmly hold small-diameter workpieces.
- Usable for wet cutting.
- Electricity is used only when mounting and demounting workpieces, thus internal heat generation is minimal to cause no thermal deformation of workpieces and contribution to energy saving is large.

Note: Electro Chuck Master and slip ring (brush holder set) required additionally.

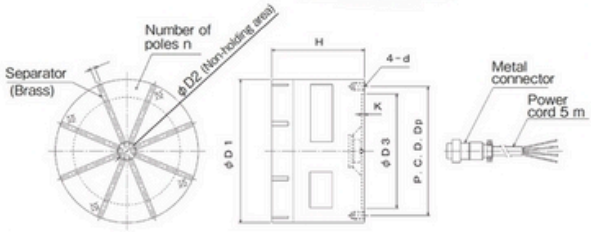

[mm(in)]

Model	Nominal Size	Work Face D_1	Work Face D_2	Work Face P	No. of Poles	Mounting Face D_3	Mounting Face K	Mounting Face Dp	Mounting Face d	Height H	Mass	Electro Chuck Master
EP-DR20	200(7.87)	200(7.87)	26(1.02)	6(0.23)	8	160(6.29)	4(0.15)	180(7.08)	M10(0.39)	125(4.92)	Approx. 27kg/ 59 lb	EPS-D2100B P54~P58
EP-DR25	250(9.84)	250(9.84)				200(7.87)		224(8.81)		130(5.11)	Approx. 42kg/ 92 lb	
EP-DR30	300(11.8)	300(11.8)			12	230(9.05)		260(10.2)		140(5.51)	Approx. 56kg/123 lb	
EP-DR40	400(15.7)	400(15.7)	36(1.41)			315(12.4)		355(13.9)		150(5.90)	Approx.100kg/220 lb	

※Turning the permanent electromagnetic chucks on and off must be limited to once per several minutes. If on/off operations are repeated frequently, the chucks may be damaged by overheat.

COMPOSITE FUNCTIONS

COMPOSITE FUNCTIONS

P029 ACSHIM® (Straightening) Automation, high efficiency		
Electromagnetic	Permanent magnetic	Control unit
KEZF-WS-A···29 KEZF-G·····30 KEZF-WX·····30	EPZF-WX·····31	EH-VFWK·····29 EH-VFW·····30 EPS-WF·····31

P032 AIRUP (Pneumatic floating)		
Electromagnetic	Control unit	
KETB·····32	ES-VB·····32	

Development of Products in Pursuit of Solving Problems Faced by the Times

The problem of technology inheritance due to labor shortage is an important issue that affects the future of enterprises and "monozukuri" (manufacturing). KANETEC promotes the development of products with originality and ingenuity designed in consideration of problems workplaces face in order to provide products that help solve such problems.

ACSHIM® Series

A conventional method to remove distortion of workpieces is to use plates called shims or liners to chuck a workpiece while holding the distorted state. This method, however, cannot deal with distortion of the central part of workpieces, requiring repetitive turnover action or adjustment of the holding power by feeling.
The ACSHIM is a product developed to simplify cutting operations involving plate distortion removal and grinding operations involving highly precise distortion removal that require skilled techniques so that unskilled workers can also perform such operations.
As sticks on the work face support a workpiece while maintaining distortion of the entire workpiece, spring back after the workpiece is released can be eliminated. This function enables it to support the central part of workpieces that cannot be achieved by conventional techniques. Thus, highly precise distortion removal machining can be conducted by anyone regardless of experience.

<Model KEZF-WS and KEZF-G>
- Sticks on the work face support a distorted (warped) workpiece and hold it in a natural state. Since no measures are necessary to support such workpieces using shims, etc., the work efficiency can be improved.
- A series of operation from supporting a workpiece (raising the sticks) up to holding and securing the workpiece can be done quickly.
- Each stick unit (workpiece support) can be removed easily for easy maintenance.

Normal electromagnetic chuck

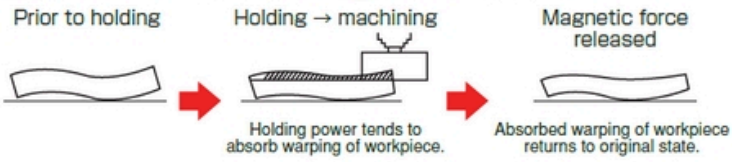

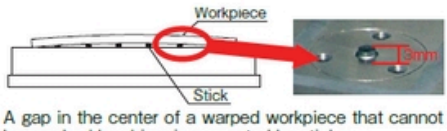

A gap in the center of a warped workpiece that cannot be reached by shims is supported by sticks.

ACSHIM

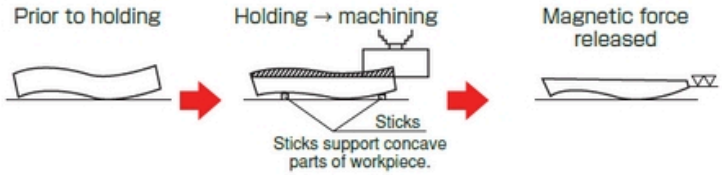

Accuracy improvement by ACSHIM (Flatness)

Workpiece size 300 × 700 mm (Material SS400)

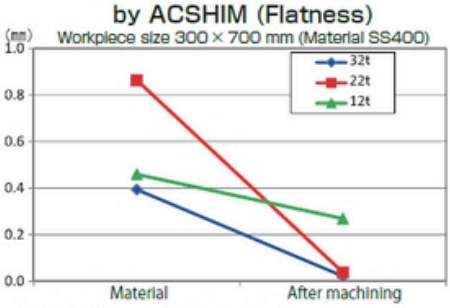

Note: Not guaranteed values.

AIRUP Chuck

Machining fluid may enter between the chuck's work face and the workpiece to create vacuum, which makes it difficult to remove the workpiece. In particular, when the ground surface of large workpieces has been held, it is dangerous to try to remove the workpiece by force. The AIRUP chuck jets air through air holes provided on its work face to break vacuum to assist workpiece removal and enhance safety and productivity. It may also be used as a function to assist workpiece replacement by a robot and assist positioning of light-weight workpieces. (The AIRUP function cannot be used to clean the work face.)

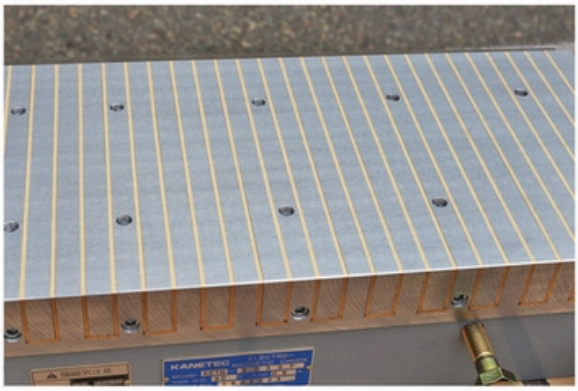

An example of introducing large special chucks can be seen here.

Topics

Consultation An example of Model KEZF-WX special fabrication

Automating distortion-removal grinding operation.

A customer who was considering installing new equipment contacted us for special fabrication of ACSHIM® for grinding.
We also heard the concept of automation of the grinding process and following two requests.

Request	•Equipment that does not require removal of the cover in the workpiece support section for maintenance because it is difficult to secure necessary time and labor. •Construction that does not allow accumulation of grinding fluid in the workpiece support section because if a large amount of grinding fluid is scattered by air blow, it will dirty the surrounding area and lead to a drop in the amount of grinding fluid.
KANETEC's action	•We proposed the electromagnetic type ACSHIM with T-groove Model KEZF-WX as a base for special fabrication. •We employed a structure having flow grooves parallel to the grinder table moving direction on the ACSHIM work face so that accumulation of grinding fluid is mitigated.
Results	We explained the structure using drawings and they decided to adopt our proposal. When they used the chuck, they evaluated it highly and thereafter, they repeated orders for more chucks.

A lineup of standard products starts on the next page.

※Please also use the Facsimile and Email Communication Forms at the end.

Electromagnetic chuck for removing distortion ACSHIM* Series

This is an epoch-making chuck that supports a distorted/ warped workpiece with sticks to hold it in its natural state.

Model KEZF-WS ACSHIM* FOR PRECISION CUTTING

Original mechanism significantly suppresses chips intrusion into the stick's moving parts!

Patent Pending

Cutting

Environmentally friendly

KEZF-WS4080A

Chuck controller required additionally

[Application]
The sticks arranged at certain pitches enable precise setting of workpieces quickly in the machining sector including mold bases in dry milling operations.

[Features]
- The precision flatness machining time can be reduced by 50%.
- The turn-over process in machining is reduced from 3 – 4 steps to 2 steps.
- The use of sticks requires no skills to machine workpieces precisely.
- Workpieces of 3 mm distortion max. can be supported.
- Most suitable for milling plates that are 20 mm or thicker.

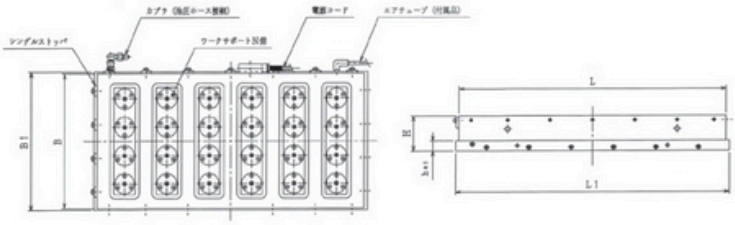

Here is the video

[mm (in)]

Model	Nominal Size	Work Face		Mounting Face			Height	Number of Sticks	Mass	Dedicated Control Unit
		B	L	B_1	L_1	t	H			
KEZF-WS 3060A	300 (11.8) × 600 (23.6)	300 (11.8)	600 (23.6)	310 (12.2)	620 (24.4)	30 (1.18)	105 (4.13)	15	130kg/286 lb	EH-VFW205A
KEZF-WS 4080A	400 (15.7) × 800 (31.5)	400 (15.7)	800 (31.5)	410 (16.1)	820 (32.2)			24	230kg/507 lb	
KEZF-WS50100A	500 (19.6) × 1000 (39.4)	500 (19.6)	1000 (39.4)	510 (20.0)	1020 (40.1)			40	360kg/793 lb	
KEZF-WS60100A	600 (23.6) × 1000 (39.4)	600 (23.6)		610 (24.0)				48	430kg/948 lb	EH-VFW210A

※The control unit and clamp parts are not included. The KANETEC chucks work best when a KANETEC chuck control unit is used.

Model EH-VFWK CONTROL UNIT FOR ACSHIM® FOR HIGH-PRECISION CUTTING

Automatic control of the ACSHIM for high precision cutting and optimal control of air operation for cleaning of chips!

EH-VFW205A

<Operation box>

[Application]
EH-VFWK205A and EH-VFWK210A are control units dedicated to the KEZF-WS-A type.

[Features]
- A series of operation can be performed automatically with the auto button on the operation box.

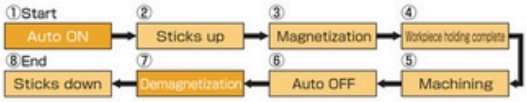

[mm (in)]

Model	Power Source	Rated Output		Required Air Pressure	Dimensions			Mass	Control Box		
		Voltage	Current		Width	Depth	Height		Width	Depth	Height
EH-VFWK205A	Single-phase 200VAC 50/60Hz	0-90 VDC	5A	0.5-0.7MPa	700 (27.5)	250 (9.84)	600 (23.6)	50kg/110 lb	180 (7.08)	70 (2.75)	220 (8.66)
EH-VFWK210A			10A		800 (31.4)	300 (11.8)		55kg/121 lb			

Model KEZF-G ACSHIM* FOR GRINDING

Arrangement of sticks for grinding operations realized!

[Application]
Designed for grinding operations and milling operations requiring higher accuracy.

KEZF-G3060

Chuck controller required additionally

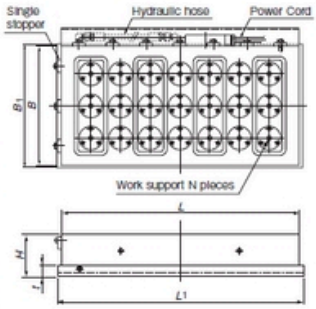

[Features]
- Deformation that occurs when light weight or thin workpieces are held can be reduced substantially.
- The amount of spring back after grinding is reduced, which contributes to improvement of finished surface accuracy.
- Wet grinding is possible.
- Workpieces of 3 mm distortion max. can be supported.
- Works well for relatively large workpieces or thin sheets (t12 or over).

[mm (in)]

Model	Nominal Size	Work Face		Mounting Face			Height	Number of Sticks	Mass	Dedicated Control Unit
		B	L	B_1	L_1	t	H			
KEZF-G 3060	300 (11.8) × 600 (23.6)	300 (11.8)	600 (23.6)	310 (12.2)	620 (24.4)	30 (1.18)	105 (4.13)	21	130kg/286 lb	EH-VFW205A
KEZF-G 4080	400 (15.7) × 800 (31.5)	400 (15.7)	800 (31.5)	410 (16.1)	820 (32.2)			36	230kg/507 lb	
KEZF-G50100	500 (19.6) × 1000 (39.4)	500 (19.6)	1000 (39.4)	510 (20.0)	1020 (40.1)			55	360kg/793 lb	
KEZF-G60100	600 (23.6) × 1000 (39.4)	600 (23.6)		610 (24.0)				66	430kg/948 lb	

※The control unit and clamp parts are not included. The KANETEC chucks work best when a KANETEC chuck control unit is used.

Model KEZF-WX ELECTROMAGNETIC ACSHIM* WITH T-SLOTS

[Application]
Most suitable for precise setting of workpieces including mold bases in the milling sector.

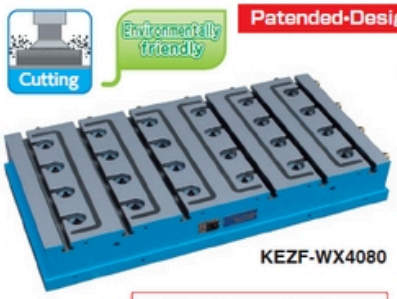

Patended•Design registered

KEZF-WX4080

Chuck controller required additionally

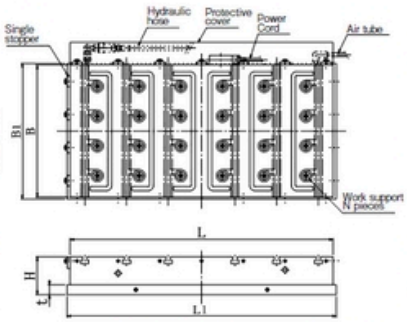

[Features]
- The sticks on the chuck attractive face hold workpieces in the natural state.
- Compared with Model KEZF-WS, this model offers more freedom of increasing/decreasing the number of sticks.
- The elimination of the lid of the stick section has enhanced maintainability as there is no need to align the level of the body and the lid when replacing the stick unit.
- The utilization of newly installed T slots enables it to clamp nonferrous or irregular shaped workpieces.
- Workpieces of 3 mm distortion max. can be supported.
- Can be used in wet operations.

A new construction to prevent occurrence of stick motion failure due to chips employed.

[mm (in)]

Model	Nominal Size	Work Face		Mounting Face			Height	Number of Sticks	Voltage	Current	Mass	Dedicated Control Unit
		B	L	B_1	L_1	t	H					
KEZF-WX 3060	300 (11.8) × 600 (23.6)	300 (11.8)	600 (23.6)	310 (12.2)	620 (24.4)	30 (1.18)	115 (4.52)	15	90 VDC	2.0A	140kg/ 308 lb	EH-VFW205A
KEZF-WX 4080	400 (15.7) × 800 (31.4)	400 (15.7)	800 (31.4)	410 (16.1)	820 (32.2)			24		2.3A	250kg/ 551 lb	
KEZF-WX50100	500 (19.6) × 1000 (39.3)	500 (19.6)	1000 (39.3)	510 (20.0)	1020 (40.1)			40		4.0A	390kg/ 859 lb	
KEZF-WX60100	600 (23.6) × 1000 (39.3)	600 (23.6)		610 (24.0)				48		6.0A	470kg/1036 lb	EH-VFW210A

※The control unit and clamp parts are not included. The KANETEC chucks work best when a KANETEC control unit is used.

Model EH-VFW CONTROL UNIT FOR ACSHIM* FOR HIGH-PRECISION CUTTING/GRINDING AND ELECTROMAGNETIC ACSHIM* WITH T-SLOTS

Controls ACSHIM Series precisely by simple operation!

EH-VFW205A

<Operation box>

[Application]
This is a dedicated unit equipped with functions to control the magnetic force of the ACSHIM and movement of sticks.

[Features]
- A series of operation can be performed automatically with the auto button on the operation box.

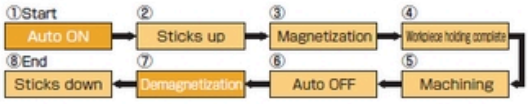

[mm (in)]

Model	Power Source	Rated Output		Required Air Pressure	Dimensions			Mass	Control Box		
		Voltage	Current		Width	Height	Depth		Width	Height	Depth
EH-VFW205A	Single-phase 200VAC 50/60Hz	0-90 VDC	5A	0.3-0.5MPa	600 (23.6)	500 (19.6)	250 (9.84)	40kg/ 88 lb	180 (7.08)	180 (7.08)	70 (2.75)
EH-VFW210A			10A		700 (27.5)	600 (23.6)	300 (11.8)	50kg/110 lb			

Model EPZF-WX PERMANENT ELECTROMAGNETIC CHUCK ACSHIM*

Highly precise straightening operations realized!

Patended•Design registered

Cutting | Environmentally friendly | Power saving | Minimal heat generation

EPZF-WX4280
(An example of special fabrication)

Chuck controller required additionally

A new construction to prevent occurrence of stick motion failure due to chips employed.

[Application]
Most suitable for precise setting of workpieces including mold bases in the milling sector.

[Features]
- The sticks on the chuck attractive face hold workpieces in the natural state.
- The number of sticks can be increased/decreased according to workpieces.
- Electricity is supplied momentarily only when mounting and demounting workpieces, thus minimal heat is generated and highly precise machining can be expected. Also electricity is saved. In addition, this ACSHIM can be used not only for plate machining, but also for various machining operations that require workpieces to be held for a long time.
- The elimination of the lid of the stick section facilitates maintenance as there is no need to align the level of the body and the lid when replacing the stick unit.
- The utilization of T slots enables it to clamp nonferrous or irregular shaped workpieces.
- The low magnetic force control by the dedicated control unit (EPS-WF275A) offers a low attraction function.
- Can be used in wet operations.

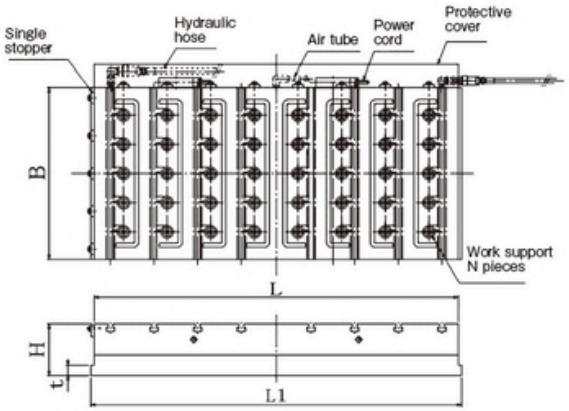

[mm (in)]

Model	Nominal Size	Work Face		Mounting Face			Height	Number of Sticks	Voltage	Mass	Dedicated Control Unit
		B	L	B	L_1	t	H				
EPZF-WX50100	500 (19.6) × 1000 (39.3)	500 (19.6)	1000 (39.3)	500 (19.6)	1020 (40.1)	30 (1.18)	150 (5.90)	40	180 VDC	520kg/1146 lb	EPS-WF275A
EPZF-WX60100	600 (23.6) × 1000 (39.3)	600 (23.6)		600 (23.6)				48		620kg/1367 lb	

※The chuck controller and clamp parts are not included. ※The KANETEC chucks work best when a KANETEC chuck controller is used.
※Turning the permanent electromagnetic chucks on and off must be limited to once per several minutes. If on/off operations are repeated frequently, the chucks may be damaged by overheat.

Model EPS-WF275A CONTROL UNIT FOR PERMANENT ELECTROMAGNETIC CHUCK ACSHIM

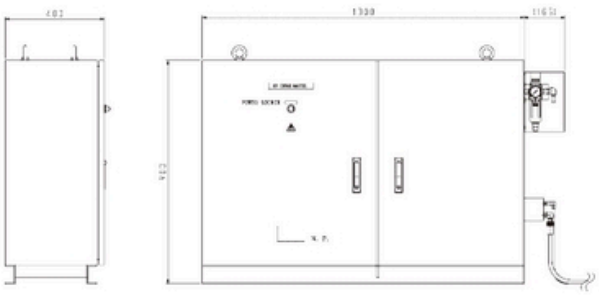

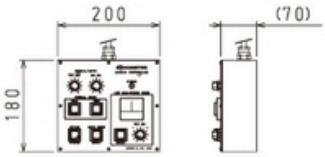

[Application]
EPS-WF275A is control units dedicated to the EPZF-WX type.

[Features]
- A series of operation can be performed automatically with the auto button on the operation box.

[mm (in)]

Model	Power Source	Rated Output		Dimensions			Mass	Operation box		
		Voltage	Current	Width	Depth	Height		Width	Depth	Height
EPS-WF275A	Single-phase 200 VAC 50/60Hz	30 VDC – 180 VDC Low magnetic force:±30 VDC (Continuous)	75A	1300 (51.1)	400 (15.7)	900 (35.4)	190kg/418 lb	200 (7.87)	70 (2.75)	180 (7.08)

Model KETB AIRUP*

Pneumatic floating type

KETB-3060B

Control unit required additionally

〈Air pressure and side slip force〉

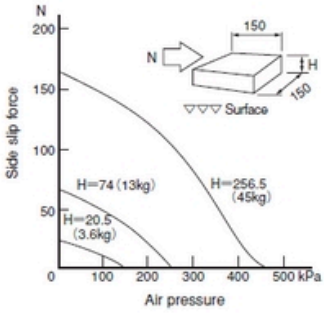

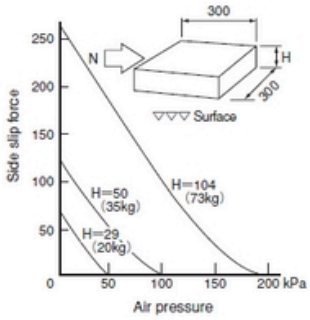

[Application]

Air is jetted through air holes provided on the chuck work face to float a workpiece for easy positioning, demounting and movement. The chucks can be air cooled by adding a cooling device. This model is for grinding, but a model for cutting is also available upon request.

[Features]

- Workpieces having strong residual magnetism can be separated and floated by the pressure of a small amount of air for easy removal.
- The optimum floating condition can be adjusted according to the material, size and shape of workpieces by increasing/decreasing the air pressure supplied from the control unit.
- As a small amount of air is constantly jetted through air holes during grinding, intrusion of grinding fluid and ground powder can be prevented.
- The air circuit in the chuck has a construction specially developed by KANETEC to minimize clogging.
- The control unit is an easy-to-operate special unit incorporating an air regulator, rectifier and demagnetizer.

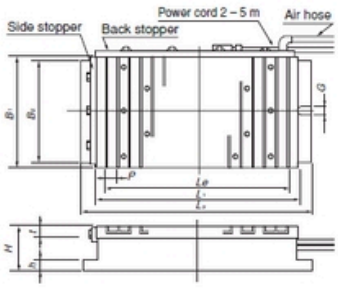

[mm (in)]

Model	Nominal Size	Work Face B_1	Work Face L_1	Work Face t	Work Face Le	Pole Pitch P	Mounting Face B_2	Mounting Face L_2	Mounting Face h	Height H	Mounting Hole G	Voltage	Current	Power Cord	Mass	Control Unit	Remarks
KETB- 2050B	200 (7.87) × 500 (19.6)	200 (7.87)	500 (19.6)	42 (1.65)	464 (18.2)	14 (2+12) (0.55)	194 (7.63)	544 (21.4)	18 (0.70)	92 (3.62)	14	90 VDC	0.34A	3m (118)	64kg/ 141 lb	ES-VB305A	The control unit incorporates an air regulator, rectifier and demagnetizer.
KETB- 2060B	200 (7.87) × 600 (23.6)		600 (23.6)		548 (21.5)	19.5 (2.5+17) (0.76)		600 (23.6)	20 (0.78)		Clamping (No hole)		0.47A		77kg/ 169 lb		
KETB- 2550B	250 (9.84) × 500 (19.6)	250 (9.84)	500 (19.6)		451 (17.7)		244 (9.60)	500 (19.6)		97 (3.81)			0.56A		84kg/ 185 lb		
KETB- 3060B	300 (11.8) × 600 (23.6)	300 (11.8)	600 (23.6)		529 (20.8)		290 (11.4)	600 (23.6)					1.06A		121kg/ 266 lb		
KETB- 4050B	400 (15.7) × 500 (19.6)	400 (15.7)	500 (19.6)		451 (17.7)		390 (15.3)	500 (19.6)		102 (4.01)			0.96A		141kg/ 310 lb		
KETB- 4060B	400 (15.7) × 600 (23.6)		600 (23.6)		529 (20.8)			600 (23.6)					1.09A		169kg/ 372 lb		
KETB-40100B	400 (15.7) ×1000 (39.4)		1000 (39.4)		919 (36.1)			1000 (39.4)					1.74A	5m (196)	281kg/ 619 lb		
KETB- 5050B	500 (19.6) × 500 (19.6)	500 (19.6)	500 (19.6)		451 (17.7)		490 (19.2)	500 (19.6)					0.93A	3m (118)	175kg/ 365 lb		
KETB-50100B	500 (19.6) ×1000 (39.4)		1000 (39.4)		919 (36.1)			1000 (39.4)					1.71A	5m (196)	351kg/ 773 lb		
KETB- 6060B	600 (23.6) × 600 (23.6)	600 (23.6)	600 (23.6)		529 (20.8)		590 (23.2)	600 (23.6)					1.48A	3m (118)	253kg/ 557 lb		
KETB-60100B	600 (23.6) ×1000 (39.4)		1000 (39.4)		919 (36.1)			1000 (39.4)					3.10A	5m (196)	422kg/ 930 lb		
KETB-80100B	800 (31.5) ×1000 (39.4)	800 (31.5)					790 (31.1)						4.23A		562kg/1239 lb		

※The control unit is not included.

Model ES-VB CONTROL UNIT FOR AIRUP*

〈Remote Control〉

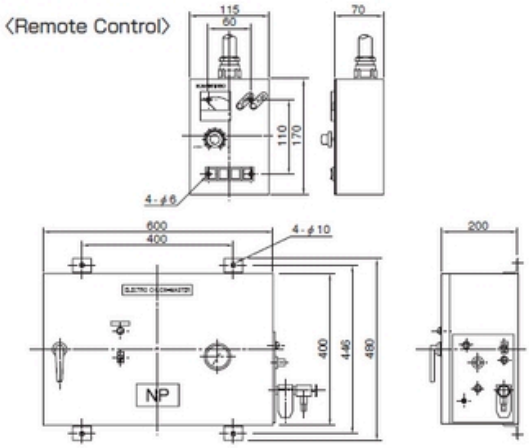

[Application]

This control unit is computer controlled to create the most effective demagnetizing patterns within a short period of time, thus providing the consistent demagnetizing effect constantly. The operation is quite simple. No complicated adjustment is necessary and an electric valve control circuit for floating is also incorporated. During grinding of workpieces, air at low pressure [about 20 kPa (0.2 kg/cm2)] is jetted through holes provided on the chuck work face to prevent intrusion of waste fluid/oil and fine particles. When unloading the workpieces after the end of grinding, the circuit is automatically switched over to the high pressure [about 150 kPa (1.5 kg/cm2)] in response to the demagnetizing command to float the workpieces

[Features]

- The demagnetizing time is as short as 6 to 15 seconds and consistent demagnetizing effect can be obtained.
- The magnetic force can be adjusted and workpieces can be straightened also.
- The noise resistance feature ensures consistent performance in certain noisy environment.
- A compact air unit is incorporated.

[mm (in)]

Model	Power Source	Output Voltage	Output Current	Dimensions Width	Dimensions Depth	Dimensions Height	Mounting Width	Mounting Height	Mounting Hole	Air Control Unit	Mass	Remote Control Width	Remote Control Depth	Remote Control Height
ES-VB305A	Single-phase 200 VAC	0 VDC – 90 VDC	5A	600 (23.6)	200 (7.87)	400 (15.7)	400 (15.7)	446 (17.5)	4 (0.15) -φ10 (0.39)	内蔵	40kg/88 lb	115 (4.52)	70 (2.75)	170 (6.69)

CHUCKS FOR NONFERROUS AND WEAK MAGNETIC MATERIALS

CHUCKS FOR NONFERROUS AND WEAK MAGNETIC MATERIALS

P035 VACUUM HOLDING

Vacuum		Vacuum system
KVR-AV·····35	KVR-GVW·····37	VPU·····38
VPU-E-AV·····35	KVR-G·····37	VPU-EG·····38
KVR·····36		VPU-OV·····38

P039 HYBRID

Electromagnetic	Permanent electromagnetic	
KETV·····39	EP-DV·····39	

P040 CEMENTED CARBIDE

Permanent magnetic		
CMR·····40	CMR-H·····40	CMR-DL·····40

P041 FIXING AGENT

PROMELTA	Control unit	
PRB·····41	PRC·····41	

Needs for Machining Nonferrous and Weak Magnetic Materials

The problem of technology inheritance due to labor shortage is an important issue that affects the future of enterprises and "monozukuri" (manufacturing). KANETEC promotes the development of products with originality and ingenuity designed in consideration of problems workplaces face in order to provide products that help solve such problems.

Securing workpieces with devices other than magnet

In the automotive and aircraft industries, materials of workpieces have diversified along with reduction of weight of components used. In response to such needs, KANETEC has developed chucks specialized in securing nonmagnetic or weak magnetic materials. They are now widely used in the fields of machining aluminum, stainless steel and resin workpieces.

Note: For securing workpieces, some conditions such as the workpiece contact face, etc. need to be satisfied.

Main product groups

Vacuum chuck

The vacuum chuck is a device to hold workpieces by reducing the pressure inside the chuck with compressed air and utilizing atmospheric pressure. This chuck works effectively for holding nonmagnetic workpieces and workpieces that do not allow deformation by mechanical clamping.

Note: Some degree of surface accuracy that comes into contact with the chuck is required in order to exhibit sufficient holding power. If you have any questions such as selection of models according to workpiece sizes, shapes, etc., please contact us.

PROMELTA® System

There are many methods to hold workpieces such as magnetic force, vacuum and mechanical clamping. We have developed and introduced to the market the chuck that utilizes solidification and melting of fixing agent as the last fort capable of eliminating such grinding difficulty as "workpieces are very small and any holding method cannot be used."

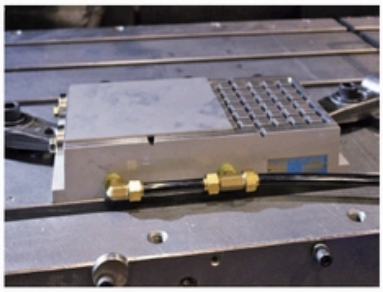

The reason why KANETEC's chucks for nonmagnetic materials are chosen.

Systems installed with minimum capital investment

As the materials to machine at customers whose main operation is machining magnetic materials have diversified, we offer a wide variety of products that assist insourcing.

A rich lineup to respond to various machining environmental conditions

Vacuum chuck capable of holding workpieces with holes

In the past, when a vacuum chuck was used to hold workpieces with holes, masking was required to prevent leaking of air. To solve such problem, we have developed the auto valve type vacuum chuck that does not require masking. Since the suction ports in the area where a workpiece is not resting are automatically closed by only simple action of setting a workpiece and applying machining fluid to the chuck, the setup time required for masking can largely be reduced.

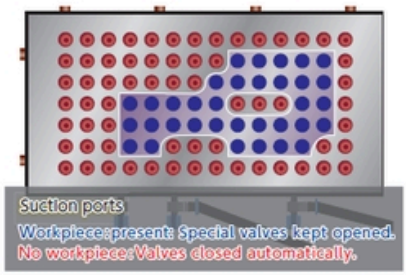

Magnetic chucks active in SUS machining operation

A demand for stainless steel plate machining has been increasing. In response to a request that "Workpiece cannot be held by magnetic force. Mechanical clamping requires many setup man-hours. We want to increase the productivity," we have developed a hybrid chuck that combines magnetic force securing and vacuum suction.
A nonmagnetic workpiece is held down by the vacuum function and its periphery is surrounded with a magnetic material that is secured by magnetic force. This mechanism has realized strong holding power which can withstand a large load in milling operations. The non-operation time can also be cut down significantly. Based on users' opinions, we propose solutions through products in various machining environments. In addition to the products listed in the brochure, we are pleased to make special chucks such as large-size connected chucks.

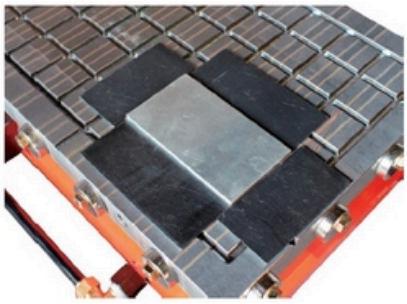

Lending of small demonstration equipment

The customers are invited for test cutting with our demonstration equipment. They can check, prior to deciding to purchase chucks, if a proposed chuck is capable of machining they want.

Topics

Consultation

An example of Model KVR-H4060 special fabrication

Securing and grinding several cemented carbide thin-plate workpieces simultaneously.

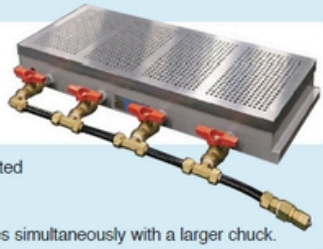

We received a request for refinement from the user who has been using permanent magnetic chucks for cemented carbide for many years as they were troubled by holding cemented carbide thin-plate workpieces.

Contents of refinement	•We want to increase the productivity of grinding by setting and holding several workpieces simultaneously with a larger chuck. •The holding power of the permanent magnetic chuck for cemented carbide is satisfactory, but we request that residual magnetism in workpieces be minimized.
Tasks	•Since the magnetic property of cemented carbide materials is weak, it seems that a magnetic chuck (such as an electromagnetic chuck) that is not designed specifically is not able to withstand the grinding resistance. •Since the required condition is to reduce the current level of residual magnetism, the permanent magnetic chuck for cemented carbide that the customer currently uses cannot meet such condition. •It seems that a vacuum chuck may be suitable, but there is a risk that should vacuum break occur even in one place, the entire workpiece holding power might be nullified.
Proposal from KANETEC	•We adopted Model KVR-H4060 as a base model for special fabrication. •We specifically designed the size and arrangement of suction holes according to the size and shape of workpieces. •Our design was to divide the vacuum chamber into two and to hold a workpiece resting on both sections. Thus, should vacuum break occur partially, the risk was reduced by such specification that would eliminate its influence on the vacuum chamber that holds the unaffected half of the workpiece. •If the number of workpieces is not enough to cover the whole surface, we requested the customer to do masking by use of resin plate. •We brought demonstration equipment to the customer and conducted test grinding.
Results	We requested the customer to set 20 or more cemented carbide thin plates measuring about 20 mm wide × about 200 to 230 mm long and to wet grind them to 1 mm or thinner. Grinding was completed without any problem and sufficient holding power was confirmed. Our original design developed to suit workpieces realized safe and optimum grinding operation. This is our proud vacuum chuck realized through try and error worked together with the user. The customer says that this has become an indispensable tool now.

A lineup of standard products starts on the next page.

※Please also use the Facsimile and Email Communication Forms at the end.

Model KVR-AV AUTO VALVE TYPE VACUUM CHUCK

An epoch-making vacuum chuck that requires no masking!

Vacuum system required additionally

KVR-AV1530

Patented

(Technical tie-up with Taiyo Tec Company)

[Application]

Nonferrous and nonmagnetic materials can be held and machined. These chucks are suitable for grinding plastics, aluminum, brass, stainless steel, ceramic and glass by machine tools. They can also be used for light duty cutting if workpieces can be held firmly.

[Features]

- ●No masking is required to reduce the setup time:
  Place a workpiece, apply grinding fluid and turn the valve. That is all required. Since the suction holes outside the workpiece are automatically closed, troublesome masking is not required and grinding can be started soon.
- ●Easy valve cleaning:
  An original modular design that causes little clogging due to sludge facilitates maintenance to reduce the running cost.
- ●Enhanced safety:
  An original construction is employed that closes the auto valve instantly should a workpiece move during grinding. This design causes no vacuum break and maintains a certain level of holding power.
- ●Dry operations supported:
  In dry grinding operations using no grinding fluid, the chuck can be used with minimum necessary masking only.

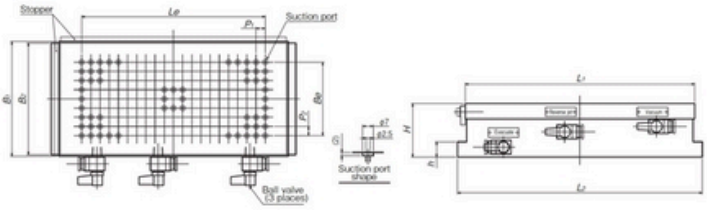

Here is the video

[mm (in)]

Model	Nominal Size	Work Face				Suction Port Pitch		No.of Suction Ports	Mounting Face			Height	Mass	Applicable Vacuum System
		B_1	L_1	Be	Le	P_1	P_2		B_2	L_2	h	H		
KVR-AV1018	100 (3.93) × 175 (6.89)	100 (3.93)	175 (6.89)	57.5 (2.26)	132 (5.20)	12 (0.47)	11.5 (0.45)	72	98 (3.86)	195 (7.68)	20 (0.79)	70 (2.75)	8kg/ 17.6 lb	VPU-E10-AV
KVR-AV1530	150 (5.90) × 300 (11.8)	150 (5.90)	300 (11.8)	96 (5.67)	240 (9.45)		12 (0.47)	188	146 (5.75)	320 (12.6)			18kg/ 39.7 lb	
KVR-AV2040	200 (7.87) × 400 (15.7)	200 (7.87)	400 (15.7)	144 (6.89)	348 (13.7)			388	196 (7.71)	420 (16.5)			30kg/ 66.1 lb	
KVR-AV3060	300 (11.8) × 600 (23.6)	300 (11.8)	600 (23.6)	228 (8.97)	540 (21.2)			908	296 (11.6)	620 (24.4)			66kg/145.5 lb	

※KVR-AV1530, KVR-AV2040 and KVR-AV3060 have places where no suction ports are provided partially. ※Clamp parts are included.

Model VPU-E-AV VACUUM SYSTEM DEDICATED TO AUTO VALVE TYPE VACUUM CHUCK

Dry/wet operations

VPU-E10-AV

[Application]

A vacuum system dedicated to the auto valve type vacuum chucks. The shuck side is evacuated continuously in order to effectively maintain the atmospheric pressure on the workpiece on the chuck work face.

[Features]

- ●A vacuum evacuation system, filter, vacuum tank and vacuum gage are incorporated neatly.
- ●Since connectors are provided, the pipes of vacuum and reverse jet required for control of the vacuum chuck can be connected easily.
- ●A difference in pressure over 80 kPa (600 mmHg) can be obtained continuously.

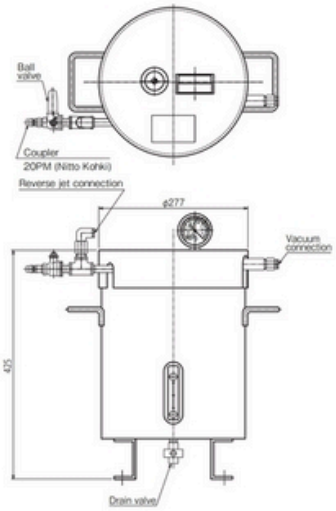

[mm (in)]

Model	Evacuation Volume	Continuous Pressure	Suction Port	Compressed Air			Dimensions		Tank Capacity	Mass
				Pressure	Consumption	Supply port	Out Dia.	Height		
VPU-E10-AV	110N ℓ/min	80 kPa (600 mmHg) or over	3/8	500—600kPa (5—6kgf/cm²)	180Nℓ/min	1/4	φ277 (10.9)	425 (16.7)	15 ℓ	25kg/ 55 lb

※The capacity of a compressor to use must be 2.5 kW or over. φ12 hose, 10 m long, is included as an accessory.

Piping of vacuum system

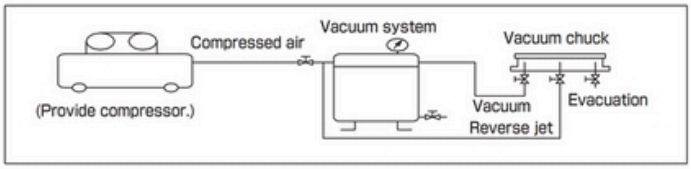

Model KVR VACUUM CHUCK

■KVR-D (Thread valve type)

●An effective holding area can be set according to shapes of workpieces by combined adjustment of thread valves and valves.
●Since suction grooves of cross shape are provided on the holding face, the number of thread valves has been reduced to enhance the work efficiency.

Vacuum system required additionally

Grinding

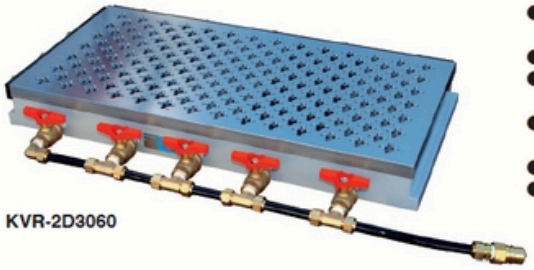

KVR-2D3060

[Application]
Chucks to hold workpieces by utilizing atmospheric pressure. Nonferrous and nonmagnetic materials can be held and machined. These chucks are suitable for grinding and cutting plastics and grinding aluminum, brass, stainless steel, ceramic and glass.

[Features]
●The suction holes on the chuck work face can be arranged to set an effective holding area according to shapes of workpieces by combined adjustment of thread valves and valves.
●The suction holes have cross grooves to expand the acting area. Thus, fewer thread valves are used to improve the work efficiency.
●The chuck work face is made of iron to allow self-grinding to recover parallelism.
●Since the chuck work face is made of iron, magnetic devices such as workpiece stoppers can be utilized.
●A special suction hole layout adapter can be installed according to workpieces and work procedures.
●These chucks can be mounted on magnetic chucks.
●Since no heat source or moving parts are used inside the chucks, highly precise machining is ensured.

[mm (in)]

Model	Nominal Size	Work Face B_1	Work Face L_1	Work Face t	Work Face Be	Work Face Le	Hole Pitch	Mounting Face B_2	Mounting Face L_2	Mounting Face h	Height H	Piping Part A	Piping Part Ball Valve	Mass	Applicable Vacuum System
KVR-2D1018	100 (3.93) ×175 (6.89)	100 (3.93)	175 (6.89)	20 (0.78)	60 (2.36)	120 (4.72)	P=20 (Staggered layout) (0.78)	96 (3.78)	195 (7.67)	20 (0.78)	70 (2.75)	28 (1.10)	Not attached	9kg/ 19 lb	VPU-E10 VPU-E20 VPU-D20 P38
KVR-2D1325	125 (4.92) ×250 (9.84)	125 (4.92)	250 (9.84)		80 (3.14)	200 (7.87)		121 (4.76)	270 (10.6)					15kg/ 33 lb	
KVR-2D1515	150 (5.90) ×150 (5.90)	150 (5.90)	150 (5.90)		100 (3.93)	100 (3.93)		146 (5.74)	170 (6.69)			84 (3.30)	attached	11kg/ 24 lb	
KVR-2D1530	150 (5.90) ×300 (11.8)		300 (11.8)			220 (8.66)			320 (12.6)					22kg/ 48 lb	
KVR-2D1545	150 (5.90) ×450 (17.7)		450 (17.7)			380 (14.9)			470 (18.5)					35kg/ 77 lb	VPU-E20 VPU-D20 P38
KVR-2D2035	200 (7.87) ×350 (13.7)	200 (7.87)	350 (13.7)		160 (6.29)	280 (11.0)		196 (7.71)	370 (14.5)					37kg/ 81 lb	
KVR-2D2050	200 (7.87) ×500 (19.6)		500 (19.6)			440 (17.3)			520 (20.4)					49kg/108 lb	
KVR-2D3060	300 (11.8) ×600 (23.6)	300 (11.8)	600 (23.6)		240 (9.44)	520 (20.4)		296 (11.6)	620 (24.4)					88kg/194 lb	

※Clamp parts are included.

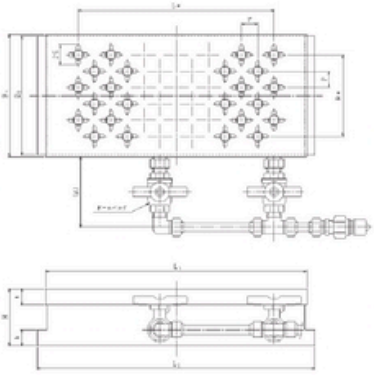

■KVR-H (Small hole type)

●Holes of ϕ4 are provided on the holding face at 8-mm pitches.

Vacuum system required additionally

Grinding

KVR-H1530

[Application]
Chucks to hold workpieces by utilizing atmospheric pressure. Nonferrous and nonmagnetic materials can be held and machined. These chucks are suitable for grinding and cutting plastics and grinding aluminum, brass, stainless steel, ceramic and glass.

[Features]
●The chuck work face is made of iron to allow self-grinding to recover parallelism.
●Since the chuck work face is made of iron, magnetic devices such as workpiece stoppers can be utilized.
●A special suction hole layout adapter can be installed according to workpieces and work procedures.
●These chucks can be mounted on magnetic chucks.
●Since no heat source or moving parts are used inside the chucks, highly precise machining is ensured.

[mm (in)]

Model	Nominal Size	Work Face B_1	Work Face L_1	Work Face t	Work Face Be	Work Face Le	Work Face C	Hole Pitch	Mounting Face B_2	Mounting Face L_2	Mounting Face h	Height H	Piping Part A	Piping Part Ball Valve	Mass	Applicable Vacuum System
KVR-H1018	100 (3.93) ×175 (6.89)	100 (3.93)	175 (6.89)	20 (0.78)	56 (2.20)	128 (5.03)	–	P=8 (0.31)	96 (3.78)	195 (7.67)	20 (0.78)	70 (2.75)	28 (1.10)	Not attached	9kg/19 lb	VPU-E10 VPU-E20 VPU-D20 P38
KVR-H1325	125 (4.92) ×250 (9.84)	125 (4.92)	250 (9.84)		88 (3.46)	208 (8.18)			121 (4.76)	270 (10.6)			84 (3.30)		15kg/33 lb	
KVR-H1515	150 (5.90) ×150 (5.90)	150 (5.90)	150 (5.90)		112 (4.40)	112 (4.40)			146 (5.74)	170 (6.69)					11kg/24 lb	
KVR-H1530	150 (5.90) ×300 (11.8)		300 (11.8)			260 (10.2)	20 (0.78)			320 (12.6)				attached	22kg/48 lb	

※Clamp parts are included.

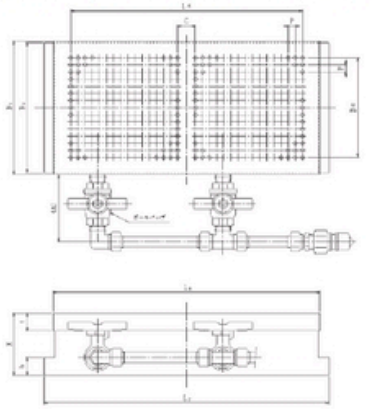

<Precautions for use>
The vacuum chuck is of such construction that the inside of the chuck is evacuated by a vacuum pump to reduce the internal pressure and a workpiece is held by atmospheric pressure. Therefore, the holding power is determined by a difference between the internal pressure and atmospheric pressure and the holding area. Due to physical restrictions, a difference in pressure that can be obtained by a pump is about 80 kPa (600 mmHg) in consideration of the upper limit of available evacuation efficiency. Since the same holding power as about 80 kPa (0.8 kgf/cm²) can be obtained, if the holding area of a workpiece is 100 cm², it is held by a holding power of about 800 N (80 kgf). Note, however, that if the holding face of workpieces is rough or distorted, even if slightly, atmospheric pressure leak occurs to decrease the holding power significantly. For such workpieces, some leak preventing measures must be taken. Workpieces could be deformed by heat generated during machining depending on materials and thickness of workpieces. Pay attention to machining methods. In particular, thin stainless steel sheets deform due to machining heat largely and are difficult to hold. If you have questions, please contact us.

Model KVR-GVW VACUUM CHUCK WITH BUILT-IN VACUUM SYSTEM

No external vacuum system required! Air consumption reduced significantly!

Grinding Cutting

KVR-GVW1530

[Application]
Suitable for light duty cutting by vacuum chucking such nonmagnetic workpieces as aluminum alloy, copper alloy, stainless steel and plastics.

[Features]
- Compared with the conventional ejector vacuum system, the air consumption amount can be reduced significantly.
- The chuck can be used by simply connecting a quick-connector type tube to a compressor in the factory.
- Since no vacuum system is required, the chuck has good response and is capable of holding and releasing workpieces quickly.
- Since air can be injected reversely through the suction port, the inside can be cleaned to facilitate maintenance.
- The internal parts can be replaced easily by removing the front cover of the chuck.
- The material of the main unit can be selected from two kinds; mild steel and aluminum alloy.
- Can be used in wet operations.

[mm(in)]

Model	Main Unit Material	Nominal Size	Dimensions L_1	L_2	B_1	H	h	B_2	Grid Pitch $P \times P$	Effective Area $Be \times Le$	Mass
KVR-GVW1530	Mild steel	150(5.90)×300(11.8)	300(11.8)	300(11.8)	150(5.90)	65(2.55)	15(0.59)	90(3.54)	20(0.78)×20(0.78)	120(4.72)×280(11.0)	17kg/37 lb
KVR-GVW2050		200(7.87)×500(19.7)	500(19.7)	524(20.6)	200(7.87)					180(7.08)×480(18.8)	43kg/94 lb
KVR-GVW3060		300(11.8)×600(23.6)	600(23.6)	624(24.5)	300(11.8)				25(0.98)×25(0.98)	275(10.8)×575(22.6)	82kg/180 lb
KVR-GVAW1530	Aluminum alloy	150(5.90)×300(11.8)	300(11.8)	300(11.8)	150(5.90)				20(0.78)×20(0.78)	120(4.72)×280(11.0)	6kg/13 lb
KVR-GVAW2050		200(7.87)×500(19.7)	500(19.7)	524(20.6)	200(7.87)					180(7.08)×480(18.8)	15kg/33 lb
KVR-GVAW3060		300(11.8)×600(23.6)	600(23.6)	624(24.5)	300(11.8)				25(0.98)×25(0.98)	275(10.8)×575(22.6)	29kg/63 lb

※Seal rubber φ4, 10 m, air tube 5 m and clamp parts are included. ※The capacity of a compressor to use must be 0.75 kW or over.

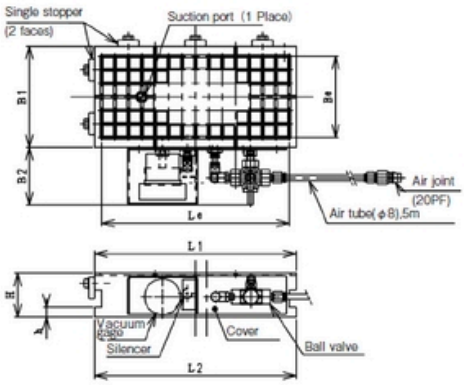

Model KVR-G VACUUM CHUCK (GRID SEAL TYPE)

KVR-G1530

Grinding Cutting

Vacuum system required additionally

[Application]
Suitable for grinding by vacuum chucking such nonmagnetic workpieces as aluminum alloy, copper alloy, stainless steel and plastics.

[Features]
- Workpieces are vacuum chucked in the area defined by seal rubber strings set in the grid grooves, ensuring good sealing and consistent holding power.
- A desired work area can be set by cutting the seal rubber string (φ6 × 5 – 20 m included) according to workpieces.
- The suction ports are provided in two places on all models to allow setting two workpieces.
- A vacuum coupler to connect to the vacuum system is provided. (Vacuum is turned on and off with the valve on the vacuum system.)
- Single stoppers are provided.
- The main unit is made of iron to enable the chuck to be held by an existing magnetic chuck.

See "Model KETV:ELECTROMAGNETIC CHUCK WITH VACUUM CHUCK" on page 39.

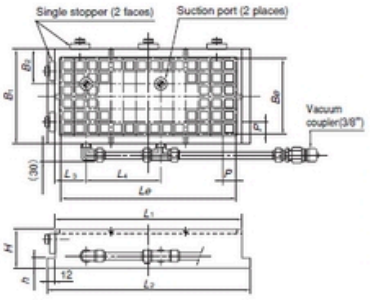

[mm(in)]

Model	Nominal Size	Dimensions L_1	L_2	B_1	H	h	B_2	L_3	L_4	Grid Pitch $P \times P$	Effective Area $Be \times Le$	Mass	Applicable Vacuum System
KVR-G1530	150(5.90)×300(11.8)	300(11.8)	324(12.7)	150(5.90)	60(2.36)	15(0.59)	55(2.16)	50(1.96)	120(4.72)	20×20(0.78×0.78)	120(4.72)×280(11.0)	22kg/48 lb	VPU-E10 VPU-D20 VPU-EG P38
KVR-G2050	200(7.87)×500(19.7)	500(19.7)	524(20.6)	200(7.87)			50(1.96)		220(8.66)		180(7.08)×480(18.9)	46kg/101 lb	
KVR-G3060	300(11.8)×600(23.6)	600(23.6)	624(24.5)	300(11.8)			63(2.48)	63(2.48)	275(10.8)	25×25(0.98×0.98)	275(10.8)×575(22.6)	82kg/180 lb	
KVR-G4080	400(15.7)×800(31.5)	800(31.5)	824(32.4)	400(15.7)					350(13.7)		375(14.7)×775(30.5)	146kg/321 lb	
KVR-G50100	500(19.7)×1000(39.4)	1000(39.4)	1024(40.3)	500(19.7)					475(18.7)		475(18.7)×975(38.3)	228kg/503 lb	

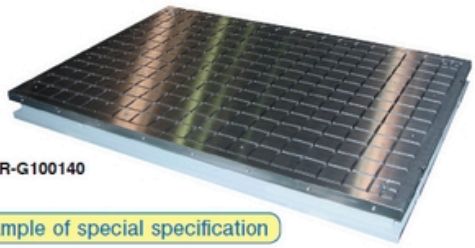

KVR-G100140

An example of special specification

An example of special specification

KVR-GR
An example of KVR-GR special specification

Model VPU VACUUM SYSTEM

Dry/wet operations

Dry operation (Wet operation not allowed)

VPU-E10 VPU-D20 <Operating valve>

[Application]
A vacuum system dedicated to the vacuum chucks. The shuck side is evacuated continuously in order to effectively maintain atmospheric pressure on the workpiece on the chuck work face. Note that this system must not be modified to a pressure container.

[Features]
- A vacuum evacuation system, filter, vacuum tank and vacuum gage are incorporated neatly.
- Suction and evacuation operations to mount and demount workpieces can be done quickly and easily with the attached special operating handle.
- A difference in pressure over 80 kPa (600 mmHg) can be obtained continuously.

Ejector type VPU-E

A vacuum system to reduce pressure by jetting air at high pressure (principle of the spray gun). This is recommended where an air line by use of a compressor is installed. This type can be used for both wet and dry machining operations. However, the use of a lubricator in the air line must be avoided.

Dry pump type VPU-D

A vacuum system to reduce pressure by evacuation by a pump driven by a motor. A power source only is required to obtain an independent vacuum source. Note, however, this is recommended only for dry machining operations.

Other types

If the physical contact with the bottom face of workpieces is poor, a large amount of air leaks, requiring a large evacuation amount. In such a case, a blower type is required for dry operations and a water-sealed vacuum pump is required for wet operations depending on work conditions. Please contact us.

Examples of application of vacuum chucks and vacuum systems

Pump \ Chuck	1018	1325	1515	1530	1545	2035	2050	3060
VPU-E10	○	○	○	○	–	–	–	–
VPU-E20	○	○	○	○	○	○	○	○
VPU-D20								

Piping of vacuum system

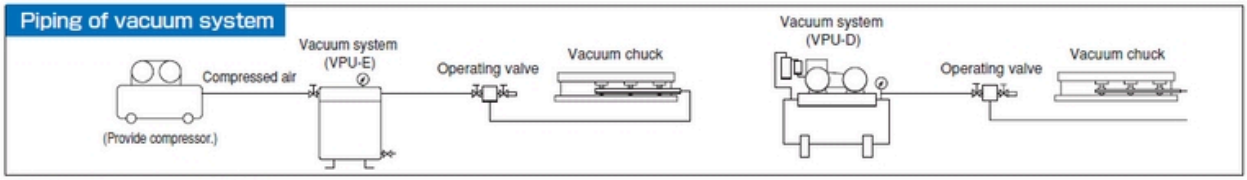

Ejector type VPU-E

[mm(in)]

Model	Evacuation Volume	Continuous Pressure Difference	Suction Port	Compressed Air			Dimensions		Tank Capacity	Mass
				Pressure	Consumption	Supply port	Out. dia.	Height		
VPU-E10	110N ℓ/min	80 kPa (600 mmHG) or over.	3/8	500–600kPa (5–6kgf/cm²)	180N ℓ/min	1/4	φ280(11.0)	425(16.7)	15 ℓ	25kg/55 lb
VPU-E20	220N ℓ/min				360N ℓ/min	3/8	φ330(12.9)	600(23.6)	30 ℓ	45kg/99 lb

※The capacity of a compressor to use must be 2.5 kW or over for VPU-E10 and 4.5 kW or over for VPU-E20. ※(1) Operating valve and (2) φ12 hose 10 m and coupler for vacuum included.

Dry pump type VPU-D (for dry operations)

[mm(in)]

Model	Evacuation Volume	Continuous Pressure Difference	Suction Port	Power Source	Dimensions			Tank Capacity	Mass
					Width	Length	Height		
VPU-D20	220/260N ℓ/min(50/60Hz)	80 kPa (600 mmHG) or over	3/8	3-phase 200 VAC, 0.4 kW	320(12.6)	700(27.5)	710(27.9)	35 ℓ	68kg/149 lb

※(1) Operating valve, (2) φ12 hose 10 m and coupler for vacuum included. (3) power cable 5 m are included as accessories.

Model VPU-EG VACUUM SYSTEM

Dry operation (Wet operation not allowed)

Light weight and compact. Satisfactory functions!

VPU-EG

[Application]
A vacuum system dedicated to the grid seal type vacuum chucks.

[Features]
- The vacuum tank has been eliminated to make a very compact size compared with the conventional model (VPU-E10). This system can be handled easily.
- A function to check the vacuum status is incorporated.
- This is for dry operation.
- Auxiliary functions in consideration of operating status and safety are incorporated. (Vacuum adjustment, interlock with the machine via vacuum check output signals, etc.)

[mm(in)]

Model	Evacuation Volume	Continuous Pressure Difference	Suction Port	Compressed Air			Dimensions			Mass
				Pressure	Consumption	Supply port	Out. dia.	Length	Height	
VPU-EG	27N ℓ/min	80 kPa (600 mmHG) or over.	φ8 tube joint (Hose and vacuum coupler included)	500–600kPa (5–6kgf/cm²)	44N ℓ/min	Vacuum coupler 20PM (Nitto Kohki)	200(7.87)	250(9.84)	190(7.48)	6kg/13.2 lb

※The capacity of a compressor to use must be around 0.75 kW. ※φ8 hose 5m and coupler for vacuum included.

Model VPU-OV OPERATION BLOCK WITH VACUUM GAGE

VPU-OV

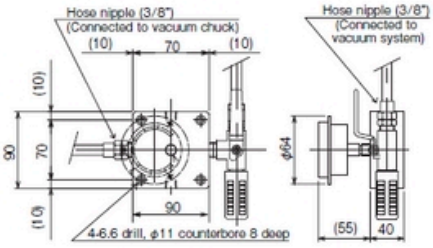

[Application]
An option to facilitate the use of vacuum chucks.

[Features]
- The operating valve and the vacuum gage have been integrated to enable it to check the state of workpiece holding near the chuck.
- By changing the location of the blank cap, a position to mount the vacuum gage can be selected from three places.

Model KETV ELECTROMAGNETIC CHUCK WITH VACUUM CHUCK FUNCTION

Grinding Cutting

Chuck controller required additionally

Vacuum system required additionally

KETV-3060F

[Application]

An electromagnetic chuck with a vacuum chuck function of grid seal type added. The vacuum chuck function enables it to hold nonmagnetic workpieces also.

[Features]

- The height has been reduced by 35 mm.
- The vacuum chuck can be configured to a desired usage area using seal rubber.
- Since vacuum is maintained by use of seal rubber, a high degree of vacuum can be maintained even when workpieces are slightly warped.
- Usable in wet operations.
- A resin-bonded structural face plate having little environmental burden is employed.

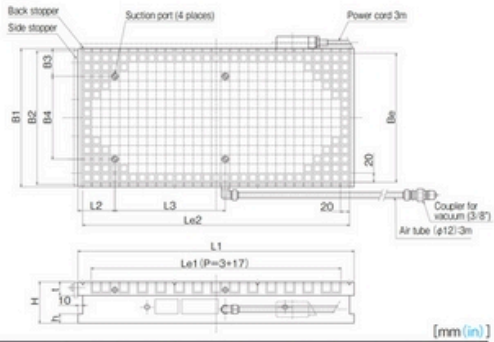

Environmentally friendly

Here is the video

[mm (in)]

Model	Nominal Size	Work Face B_1	L_1	t	Le_1	Le_2	L_2	L_3	Be	B_3	B_4	Pole pitch P	Mounting Face B_2	h	Height H	Grid Pitch	Voltage	Current	Mass	Applicable Vacuum System
KETV- 3060F	300 (11.8) × 600 (23.6)	300 (11.8)	600 (23.6)	30 (1.18)	543 (21.3)	590 (22.8)	80 (3.14)	240 (9.44)	280 (11.0)	60 (2.36)	180 (7.08)	20 (3+17) (0.78)	290 (11.4)	20 (0.78)	90 (3.54)	20 (0.78) × 20 (0.78)	90 VDC	1.3A	110kg/242 lb	VPU-D20 VPU-E10 VPU-E20 P38
KETV- 4080F	400 (15.7) × 800 (31.5)	400 (15.7)	800 (31.5)		743 (29.2)	780 (30.7)		320 (12.5)	380 (14.9)		280 (11.0)		390 (15.3)					1.9A	190kg/418 lb	
KETV-50100F	500 (19.6) × 1000 (39.4)	500 (19.6)	1000 (39.4)	31.5 (1.24)	943 (37.1)	980 (38.5)		440 (17.3)	480 (18.8)		380 (14.9)		490 (7.08)		91 (3.58)			2.3A	300kg/661 lb	
KETV-60100F	600 (23.6) × 1000 (39.4)	600 (23.6)							580 (22.8)		480 (18.8)		590 (23.2)					3.4A	360kg/793 lb	

※Seal rubber φ6, 10 m is included. ※The chuck controller and vacuum system are not included. ※The KANETEC chucks work best when a KANETEC chuck controller is used.

Model EP-DV POWERFUL PERMANENT ELECTROMAGNETIC CHUCK WITH VACUUM FUNCTION

Hybrid chuck to handle diversified materials!

Grinding Cutting Power saving Minimal heat generation

EP-DV3060

Chuck controller and vacuum system required additionally

An example of milling by utilizing the permanent electromagnetic feature

An example of grinding of brass by utilizing the permanent electromagnetic feature

[Application]

Permanent electromagnetic chucks for cutting equipped with a grid-seal type vacuum chuck function added to hold workpieces during cutting and grinding of magnetic and nonmagnetic workpieces.

[Features]

- The strong holding power makes these chucks suitable for cutting of magnetic materials.
- Electricity is used only when mounting and demounting workpieces, thus minimal heat is generated and electricity is saved.
- Since these chucks have a construction dedicated to demagnetization, they have good workpiece release performance when they are turned off.
- The vacuum chuck can be set to a desired area by use of seal rubber according to workpieces.
- When machining nonmagnetic workpieces, the permanent electromagnetic feature can be utilized to hold magnetic substances around them to secure them firmly.

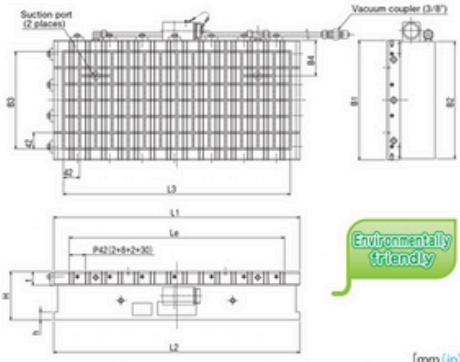

Environmentally friendly

[mm (in)]

Model	Nominal Size	Work Face B_1	L_1	Le	t	B_4	Pole Pitch P	Mounting Face B_2	L_2	h	Height H	Grid Pitch	Effective Area $B_3 \times L_3$	Mass	Electro Chuck Master	Applicable Vacuum System
EP-DV 3060	300 (11.8) × 600 (23.6)	310 (12.2)	638 (25.1)	558 (21.9)	35 (1.37)	92 (3.62)	42 (2+8+2+30) (1.65)	304 (11.9)	638 (25.1)	20 (0.78)	125 (4.92)	42 (1.65) × 42 (1.65)	252 (9.9) × 588 (23.1)	170kg/374lb	EPS-D2100B P54~P58	VPU-EG VPU-E10 VPU-D20 P38
EP-DV 4080	400 (15.7) × 800 (31.5)	410 (16.1)	806 (31.7)	726 (28.5)		79 (3.11)		404 (15.9)	806 (31.7)				378 (14.8) × 756 (29.7)	280kg/617lb		
EP-DV50100	500 (19.6) × 1000 (39.4)	510 (20.0)	1058 (41.6)	978 (38.5)		87 (3.42)		504 (19.8)	1058 (41.6)				462 (18.1) × 1008 (39.6)	450kg/992lb	EPS-D2100B-2 P54~P58	

※The chuck controller, vacuum system and clamp parts are not included. ※The KANETEC chucks work best when a KANETEC chuck controller is used.
※Turning the permanent electromagnetic chucks on and off must be limited to once per several minutes. If on/off operations are repeated frequently, the chucks may be damaged by overheat.

Model CMR NON-CHANGEABLE PERMANENT MAGNETIC CHUCK FOR CEMENTED CARBIDE

Grinding

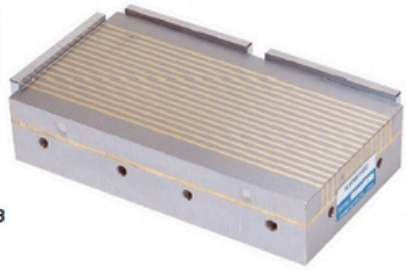

CMR-1018

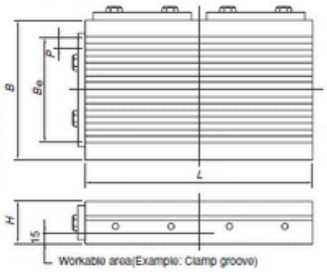

[Application]
These permanent magnetic chucks are designed for securing workpieces of materials having a relatively weak magnetic properties such as cemented carbide during grinding. They are normally mounted on and held by other chuck for use.

[Features]
- The use of a powerful rare earth magnet ensures a sufficient holding power even on cemented carbide materials.

[mm (in)]

Model	Nominal Size	Work Face			Pole Pitch	Height	Holding Power	Mass
		B	L	Be	P	H		
CMR-1010	100 (3.93) × 100 (3.93)	100 (3.93)	100 (3.93)	72 (2.83)	5 (2+3) 0.19 (0.07+0.11)	40 (1.57)	210N (21kgf) on □50 × t25 carbide test piece	3 kg/ 6.6 lb
CMR-1018	100 (3.93) × 180 (7.08)		180 (7.08)					5.5kg/ 12.1 lb

Model CMR-H NON-CHANGEABLE PERMANENT MAGNETIC CHUCK FOR CEMENTED CARBIDE

Grinding

CMR-H0709
<Standard pitch type>

CMR-HW0709
<Fine pitch type>

Side slip measuring direction

[Application]
Permanent magnetic chucks for grinding operations to hold materials such as cemented carbide that cannot be secured fully.

[Features]
CMR-H
- Suitable mainly for relatively large and thick workpieces. The gap characteristic is excellent.
- The holding power has been increased 1.5 times max. from the conventional chucks.
- The separator part is made of stainless steel to enhance accuracy stability.

CMR-HW
- Works well on small and thin workpieces that cannot be held by conventional pitches.
- The holding power is 2 times max. (depending on materials) the conventional chucks.
- The separator part is made of stainless steel to enhance accuracy stability.

[mm (in)]

Model	Nominal Size	Height	Pole Pitch		Mass
CMR-H0709	65 (2.55) × 90 (3.54)	30 (1.18)	6 (3+3)	0.23 (0.11+0.11)	1.3kg/ 2.8 lb
CMR-HW0709			2 (1+1)	0.07 (0.03+0.03)	
CMR-H1215	120 (4.72) × 150 (5.90)	33 (1.29)	6 (3+3)	0.23 (0.11+0.11)	3.6kg/ 7.9 lb
CMR-HW1215			2 (1+1)	0.07 (0.03+0.03)	

Comparison of side slip holding power

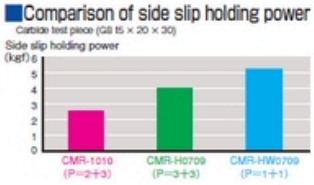

CMR-H type holding power characteristics

●Relation between gap and holding power using □50 carbide test piece

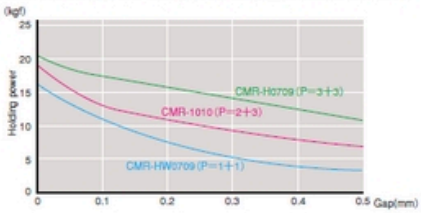

Model CMR-DL CHANGEABLE PERMANENT MAGNETIC CHUCK FOR CEMENTED CARBIDE

Grinding

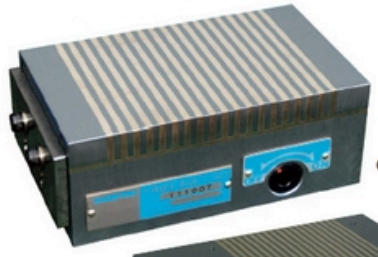

CMR-DL0915B

CMR-DL1319B

[Application]
These chucks are designed for grinding workpieces of materials having relatively weak magnetic properties such as cemented carbide on small grinders.

[Features]
- The ON-OFF handle turning angle has been reduced to improve the handle operability significantly.
- The holding performance has been enhanced by improving the pole pitch.
- Residual magnetism has been reduced by employing a unique construction. (CMR-DL1319B)
- The effective attractive face area relative to the external dimensions has been increased 30% over the conventional model. (CMR-DL0915B)

[mm (in)]

Model	Nominal Size	Height	Pole Pitch	Effective Pole Width	Holding Power※	Handle Select Angle	Mass	Features
CMR-DL0915B	85 (3.34) × 145 (5.70)	55 (2.16)	6 (3+3) 0.23 (0.11+0.11)	105 (4.13)	162N	90°	4.5kg/ 9.92 lb	Compact
CMR-DL1319B	132 (5.19) × 190 (7.48)	48 (1.89)			175N		9kg/ 19.8 lb	Standard
CMR-DW1319			4 (2+2) 0.15 (0.07+0.07)	106 (4.17)	190N	60°		Fine
CMR-DS1319			8 (4+4) 0.31 (0.15+0.15)	100 (3.94)	200N	120°		Powerful

※The holding power is based on a test piece of □50 × t25 carbide (G5).
※As for the handle, a dedicated handle is included.

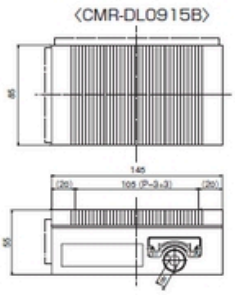

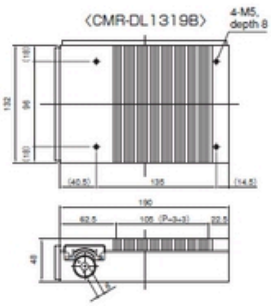

Model PRB/PRC PROMELTA* SYSTEM

A system to enable surface grinding of a wide range of materials from magnetic materials to such non-magnetic materials as aluminum, stainless steel and ceramic.

Grinding

PRB-2050A
<Chuck part>

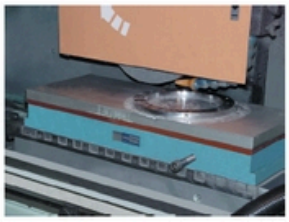

PRC-220B
〈Controller〉

[Features]

■A wide variety of workpieces!

Workpieces of such non-magnetic materials as plastic, aluminum, stainless steel, ceramic and glass that are difficult to hold and secure with conventional chucks can be secured easily. ※

In particular, this system is most suitable for holding small workpieces that cannot be held by magnetic chucks.

Also, negative impact on accuracy due to warping of workpieces, which is unavoidable when mechanical clamps are used, has been eliminated.

It cannot be used with the following workpieces in some cases:

- ·Workpieces having abrasive-like surface (e.g. plaster)
- ·Workpieces warped largely (more than 0.5 mm)
- ·Thin (less than 1.0 mm) workpieces such as stainless steel that tend to be distorted by grinding heat
- ·Some resins such as Teflon

■Easy installation

The main unit can be installed on a machine by use of T-slots. Also since its mounting face is made of iron, it can easily be mounted on your magnetic chuck.

■A remote control box included!

A remote control box for controlling the chuck unit comes as a standard accessory, which can be installed in an easy-to-operate place.

Operation box size: Width 80 × height 110 × depth 50 mm.

●Exclusive to wet grinding

The wax used with this system is susceptible to impact and therefore cannot be used for cutting as a rule. In dry operations, the temperature of workpieces rises to melt the wax and therefore, it cannot be used.

[mm (in)]

Model	Dimensions						Rated Current	Mass
	B	B_1	B_2	L	L_1	H		
PRB-1218A	125 (4.92)	121 (4.76)	161 (6.33)	177 (6.96)	193 (7.59)	77 (3.03)	3A	14kg/ 30 lb
PRB-1530A	150 (5.90)	146 (5.74)	186 (8.07)	300 (11.8)	316 (12.4)	80 (3.14)	7A	28kg/ 61 lb
PRB-2050A	200 (7.87)	196 (7.71)	255 (10.0)	500 (19.6)	516 (20.3)		17A	55kg/ 121 lb

※Three pieces of standard type fixing agent (1 piece: ϕ30×160) are included. When they have been used up, please purchase them.

[mm (in)]

Model	Input	Output		Mass
	Voltage	Voltage	Current	
PRC-220B	3-phase 200 VAC, 50/60 Hz	200 VAC	20A	120kg/264 lb

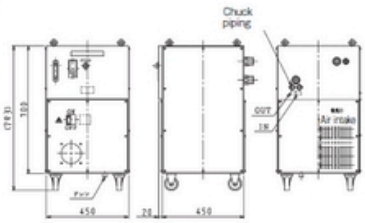

<Controller>

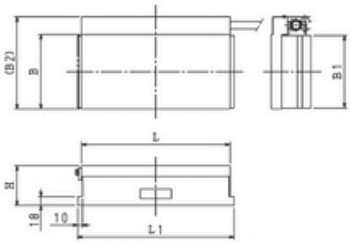

<Chuck part>

Item	Securing method	PROMELTA System	Refrigerating Chuck	Vacuum Chuck	Magnetic Chuck (Electromagnetic/ Permanent)	Mechanical Clamp (e.g. Vice)
Workpiece to fix	Material	◎	◎	◎	× (Magnetic materials only)	△ (Soft materials not possible)
	Size/plate thickness	◎	◎	△ (Small workpieces not possible)	△	△ (Thin sheets not possible)
	Material distortion	○	◎	×	○	◎
Operability	Pretreatment	△ (Cleaning required)	△	△ (Unused hole masking)	◎	◎
	Fixing time	△	△	◎	◎	○
	Releasing time	△	△	◎	◎	○
	Post treatment	△ (Cleaning required)	◎	◎	◎	◎
Grinding condition	Infeed per pass (Fixing power stability)	◎	△ (Weak to grinding heat)	○	◎	◎
	Wet operations	◎	×	○	◎	◎
Grinding accuracy	(Workpiece distortion when clamped)	◎	◎	△	△ (○ depending on grinding method)	○
Cost	Running cost	○	◎	◎	◎	◎
	Facility scale	△	△	○	○	◎
	System price	△	△	○	○	◎

■Fixing agent

Melting temperature 65℃ Its film thickness is5 to 10μm.

Fixing power (by materials)

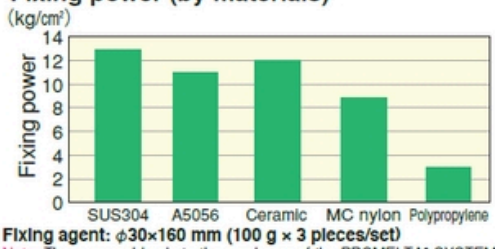

Fixing agent: ϕ30×160 mm (100 g × 3 pieces/set)

Note: These are sold only to the purchaser of the PROMELTA* SYSTEM.

●For removing fixing agent remaining after securing workpieces, cleaning liquid and ultrasonic cleaner (optional) are available.

Fixing agent for PROMELTA SYSTEM

Ultrasonic cleaner (optional)

※Note: The grinding accuracy is presented for reference only. It varies according to shapes, materials and sizes of workpieces and grinding environment such as machines.

For evaluation of this system, preliminary fixing tests are necessary. Please contact KANETEC sales office in charge of you and provide workpiece samples.

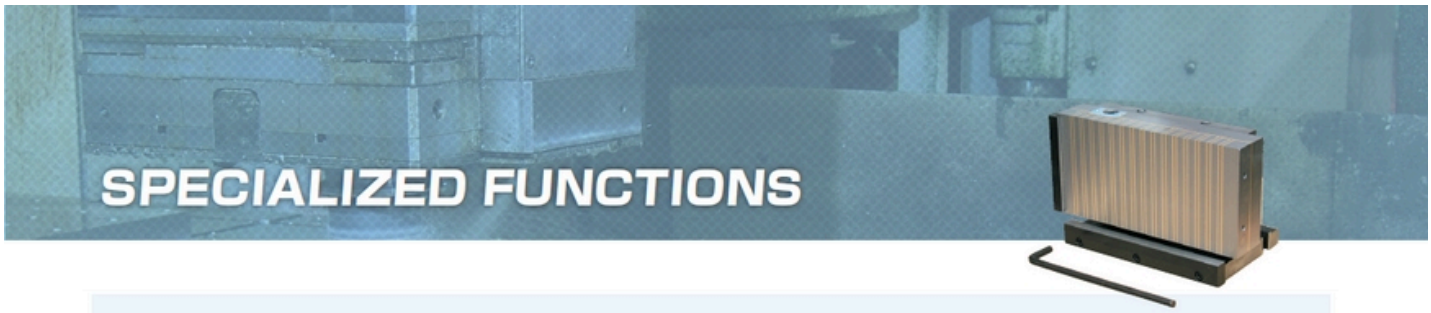

SPECIALIZED FUNCTIONS

P043 VERTICAL TYPE

Permanent magnetic	
SKM·····43	SKAW·····43

P044 TILT TYPE

Permanent magnetic		
RMT-ED·····44	RMWH-ED·····44	RMC-ED·····44

P045 ELECTRIC DISCHARGE & USE IN LIQUID

Electromagnetic	Permanent magnetic	Permanent electromagnetic
KET-U·····45 KCT-U·····45 KEZ-H·····45 KET-UTS·····46	RMT-U·····46 RMA-U·····47	EP-DM-U·····47 EPZ-U·····47

P048 SINE BAR

Electromagnetic	Permanent magnetic	Permanent electromagnetic
SBE-U·····49 SBC-U·····49	SBP-R・UR···49 SBP-R・LS·····50 SBP-R・S·····50 SBP-R・L·····50 SBP-R·····51 SBP-R・L(ミニ)···51	SBEP-U·····51

P052 5-FACE MACHINING

Electromagnetic	Permanent electromagnetic	
RMA-2F·····52	EPB·····52	EPB-2F·····52

P053 LONG WORKPIECE

Permanent electromagnetic		
EP-QL·····53	EP-QZ·····53	

Responding to Diversified Machining Operations

A lineup of magnetic chucks specially designed to meet various machining conditions ensures the quality required by customers!

- KANETEC offers a lineup of specialized products to meet requests we frequently receive from customers such as vertical holding, use in liquid and holding long workpieces such as railway rails.
- The vertical type magnetic chuck has its attractive face in the vertical direction realized by adding an angle plate. As it attracts a workpiece from sides, it assists holding a workpiece as in the conventional horizontal direction and effectively holds workpieces on profile polishing machines.
- The drive mechanism of normal permanent magnetic chucks when used in liquid tends to fail when it is turned on and off due to intrusion of sludge and dust. To prevent such problem, the chucks need to be waterproofed. The permanent magnetic chuck for electric discharge machine is a product specially designed for use in liquid in electric discharge machining as it has improved sealing performance to minimize aging.
- For machining long workpieces such as railway rails seamlessly, the most suitable chuck is the ultrapowerful type permanent electromagnetic chuck for long workpiece machining.

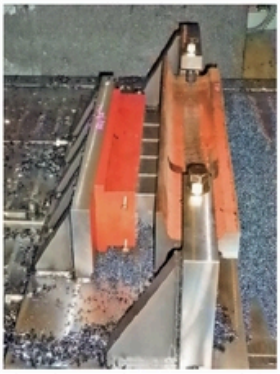

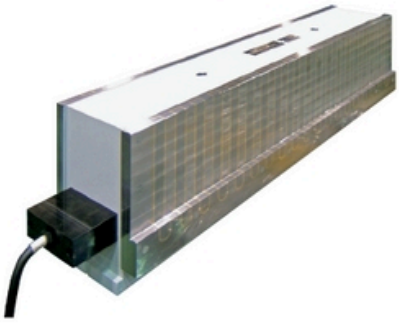

A lineup of standard products starts on the next page.

※Please also use the Facsimile and Email Communication Forms at the end.

Model SKM VERTICAL PERMANENT MAGNETIC CHUCK

SKM-1325

An example of mounting

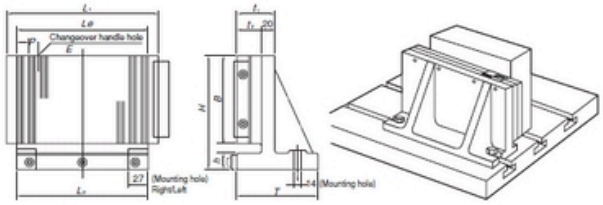

[Application]
These chucks are suitable for applications where when securing a workpiece on the table of a machine, it needs to be held vertically due to its shape or it needs to be secured from sides additionally when it cannot be held sufficiently horizontally.

[Features]
- The permanent magnetic chuck used in Model SKM is our powerful RMT.
- Hold various sizes of workpieces; thin, small and thick.

[mm (in)]

Model	Nominal Size	Work Face			Pole Pitch	Mounting Face		Thickness		Height		Handle Hole	Mass
		B	L_1	Le	P	T	L_2	t_1	t_2	H	h	E	
SKM-1018	100 (3.93) × 175 (6.89)	100 (3.93)	175 (6.89)	137 (5.39)	14.5 (1.5+3.2+1.5+8.3) 0.57 (0.05+0.12+0.05+0.32)	130 (5.11)	145 (5.70)	70 (2.75)	50 (1.96)	130 (5.11)	20 (0.78)	Hex. 8 (0.31)	13kg/28 lb
SKM-1325	125 (4.92) × 250 (9.84)	125 (4.92)	250 (9.84)	209 (8.22)			210 (8.26)			160 (6.29)			22kg/48 lb
SKM-1530	150 (5.90) × 300 (11.8)	150 (5.90)	300 (11.8)	253 (9.96)			260 (10.2)			180 (7.08)			30kg/66 lb

※One set of stoppers is included. As for the handle, a hex wrench key is included.

Model SKAW VERTICAL PERMANENT MAGNETIC CHUCK

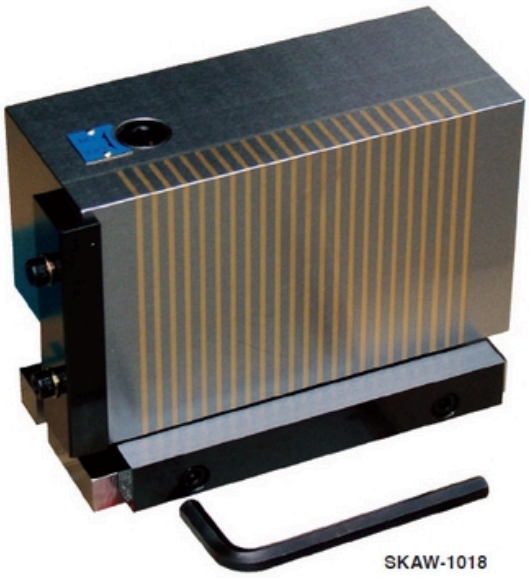

SKAW-1018

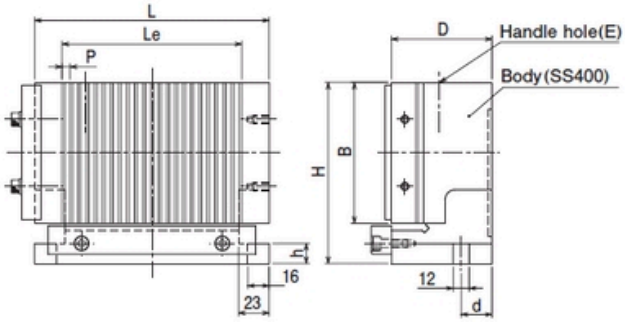

[Application]
This chuck is suitable for applications where when securing a workpiece on the table of a machine, it needs to be held vertically due to its shape or it needs to be secured from sides additionally when it cannot be held sufficiently horizontally.

[Features]
- Compared with Model SKM, this model can hold smaller and thinner (3 mm) workpieces.
- The rigid construction facilitates maintenance such as recovering the original accuracy.

The standard material of the angle plate is SS400, but it may be made of SKD-11 (HRC60).

[mm (in)]

Model	Nominal Size	Work Face			Pole Pitch	Thickness	Height	Mounting Face		Handle Hole	Mass
		B	L	Le	P	D	H	d	h	E	
SKAW-1018	105 (4.13) × 175 (6.89)	105 (4.13)	175 (6.89)	134 (5.27)	2+4 (0.07+0.15)	75 (2.95)	135 (5.31)	23 (0.90)	12 (0.47)	Hex. 8 (0.31)	14kg/30 lb

※One set of stoppers is included. As for the handle, a hex wrench key is included.

Model RMT-ED RECTANGULAR PERMANENT MAGNETIC CHUCK WITH JET HOLE

RMT-ED2525

[Application]
Suitable for securing workpieces during electric discharge machining.

[Features]
- Can be used in liquid.
- With extra powerful holding, these chucks are suitable for applications that require strong holding power.
- A jet hole is provided for jet-stream machining.
- The bottom face is made flat to allow providing tapped holes for clamp fixtures.
- Counter boring around the jet hole on the attractive face is possible.
- The water-tightness performance has been improved over the standard type.

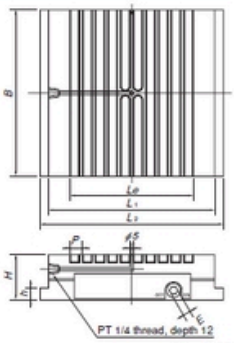

[mm (in)]

Model	Nominal Size	Work Face			Pole Pitch	Mounting Face			Height	Handle Hole	Mass
		B	L_1	Le	P	B	L_2	h	H	E	
RMT-ED2020	200 (7.87) × 200 (7.87)	200 (7.87)	200 (7.87)	149 (5.86)	15.2 (1.5+9+1.5+3.2) (0.59)	200 (7.87)	220 (8.66)	15 (0.59)	55 (2.16)	Hex. 8 (0.31)	16kg/35 lb
RMT-ED2525	250 (9.84) × 250 (9.84)	250 (9.84)	250 (9.84)	210 (8.26)		250 (9.84)	270 (10.6)				25kg/55 lb

※As for the handle, a hex wrench key is included. ※An electromagnetic type (special specification) is also available.

Model RMWH-ED RECTANGULAR PERMANENT MAGNETIC CHUCK FOR ELECTRIC DISCHARGE MACHINING

RMWH-ED2525

An example of usage

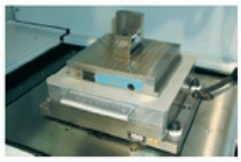

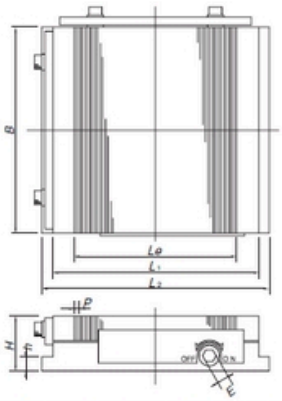

[Application]
Suitable for securing workpieces during electric discharge machining.

[Features]
- Can be used in liquid.
- A fine pole pitch ensures securing thin and small workpieces firmly.

[mm (in)]

Model	Nominal Size	Work Face			Pole Pitch	Mounting Face			Height	Handle Hole	Mass
		B	L_1	Le	P	B	L_2	h	H	E	
RMWH-ED1018	105 (4.13) × 175 (6.88)	105 (4.13)	175 (6.88)	142 (5.59)	3 (1+2) 0.11 (0.03+0.07)	105 (4.13)	191 (7.51)	10 (0.39)	40 (1.57)	Hex. 8 (0.31)	5.5kg/ 12.1 lb
RMWH-ED1515	150 (5.90) × 150 (5.90)	150 (5.90)	150 (5.90)	118 (4.64)		150 (5.90)	166 (6.53)				7.5kg/ 16.5 lb
RMWH-ED1530	150 (5.90) × 300 (11.8)	150 (5.90)	300 (11.8)	256 (10.0)		150 (5.90)	316 (12.4)				14kg/ 30.8 lb
RMWH-ED2020	200 (7.87) × 200 (7.87)	200 (7.87)	200 (7.87)	160 (6.29)		200 (7.87)	216 (8.50)				13kg/ 28.6 lb
RMWH-ED2040	200 (7.87) × 400 (15.7)	200 (7.87)	400 (15.7)	346 (13.3)		200 (7.87)	416 (16.3)				25kg/ 55.1 lb
RMWH-ED2525	250 (9.84) × 250 (9.84)	250 (9.84)	250 (9.84)	208 (8.18)		250 (9.84)	266 (10.4)				20kg/ 44.0 lb
RMWH-ED3050	300 (11.8) × 500 (19.6)	300 (11.8)	500 (19.6)	442 (17.4)		300 (11.8)	516 (20.3)	14 (0.55)	45 (1.77)		53kg/116.8 lb
RMWH-ED3060	300 (11.8) × 600 (23.6)	300 (11.8)	600 (23.6)	541 (21.2)		300 (11.8)	616 (24.2)				63kg/138.8 lb

※As for the handle, a hex wrench key is included.

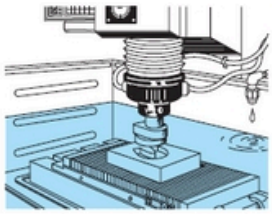

An image of usage on electric discharge machine

Model RMC-ED ROUND PERMANENT MAGNETIC CHUCK WITH JET HOLE

RMC-ED20

[Application]
Suitable for securing workpieces during electric discharge machining.

[Features]
- Can be used in liquid.
- With extra powerful holding, these chucks are suitable for applications that require strong holding power.
- A jet hole is provided for jet-stream machining.
- The bottom face is made flat to allow providing tapped holes for clamp fixtures.
- Counter boring around the jet hole on the attractive face is possible.

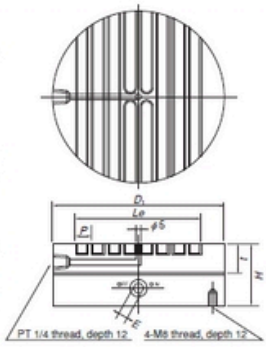

[mm (in)]

Model	Nominal Size	Work Face		Pole Pitch	Face Plate Thickness	Height	Handle Hole	Mass
		D_1	Le	P	t	H	E	
RMC-ED16	160 (6.29)	160 (6.29)	118 (4.64)	15.2 (1.5+9+1.5+3.2) 0.59 (0.05+0.35+0.05+0.12)	29 (1.14)	60 (2.36)	Hex. 8 (0.31)	8.5kg/18 lb
RMC-ED20	200 (7.87)	200 (7.87)	149 (5.86)					14kg/31 lb

※As for the handle, a hex wrench key is included.

Model KET-U TILT TYPE ELECTROMAGNETIC CHUCK

Chuck controller required additionally

Grinding

Environmentally friendly

KET-1545UF

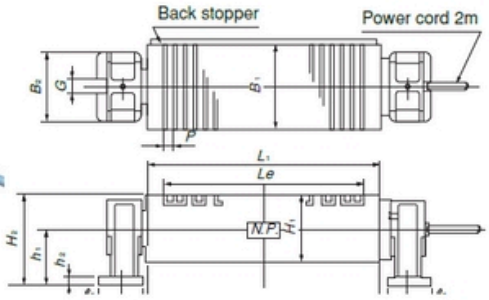

[Application]
Suitable for grinding inclined faces of jigs/fixtures and metal molds.

[Features]
- Easy mounting and an angle can be set as desired in a range of 90° forward and 90° backward.
- The rotary shaft with scale facilitates angle setting.
- A resin-bonded structural face plate having little environmental burden is employed.

[mm (in)]

Model	Nominal Size	Work Face B_1	Work Face L_1	Work Face Le	Work Face H_1	Pole pitch P	Tilt Base B_2	Tilt Base ℓ_1	Tilt Base ℓ_2	Tilt Base G	Tilt Base h_1	Tilt Base h_2	Tilt Base a_1	Tilt Base a_2	Length L_2	Height H_2	Voltage	Current	Mass	Electro Chuck Master	Remarks
KET- 614UF	60(2.36)×140(5.51)	60(2.36)	140(5.51)	106(4.17)	60 (2.36)	8(2+6) (0.31)	60 (2.36)	48 (1.89)	20 (0.78)	8.5 (0.33)	55 (2.1)	13 (0.51)	4 (0.15)	12 (0.47)	242(9.52)	85 (3.34)	90 VDC	0.09A	4kg/ 8 lb	ES-M103C ES-M305C EH-V305B EH-VE305B	※For types with a combination of a rectifier and demagnetizer, see pages of "Chuck Controllers." P54–P58
KET-1025UF	100(3.93)×250(9.84)	100(3.93)	250(9.84)	211(8.30)	100 (3.93)	11(2+9) (0.31)	95 (3.74)	54 (2.12)	25 (0.98)	14 (0.55)	75 (2.95)	16 (0.62)	8 (0.31)	16 (0.62)	382(15.0)	125 (4.92)		0.16A	21kg/ 46 lb		
KET-1030UF	100(3.93)×300(11.8)		300(11.8)	255(10.0)											432(17.0)			0.21A	23kg/ 50 lb		
KET-1040UF	100(3.93)×400(15.7)		400(15.7)	365(14.3)											532(20.9)			0.26A	30kg/ 66 lb		
KET-1230UF	120(4.72)×300(11.8)	120(4.72)	300(11.8)	240(9.44)		14(2+12) (0.55)	100 (3.93)				91 (3.58)	18 (0.70)			432(17.0)	141 (5.55)		0.21A	29kg/ 64 lb		
KET-1530UF	150(5.90)×300(11.8)	150(5.90)																0.20A	37kg/ 81 lb		
KET-1535UF	150(5.90)×350(13.7)		350(13.7)	296(11.6)											482(18.9)			0.22A	41kg/ 90 lb		
KET-1545UF	150(5.90)×450(17.7)		450(17.7)	408(16.0)											582(22.9)			0.29A	51kg/112 lb		
KET-2050UF	200(7.87)×500(19.6)	200(7.87)	500(19.6)	464(18.2)			120 (4.72)	59 (2.32)		16 (0.62)	120 (4.72)	20 (0.78)			642(25.2)	170 (6.69)		0.34A	76kg/167 lb		
KET-2060UF	200(7.87)×600(29.6)		600(23.6)	548(21.5)											742(29.2)			0.47A	89kg/196 lb		

※If the magnetic force needs not be adjusted, use ES-M. ※The chuck controller and clamp parts are not included. The KANETEC chucks work best when a KANETEC chuck controller is used.
※The scaled ring can be used to set an angle roughly. When it is necessary to set the angle accurately, use a sine bar or other suitable device.

Model KCT-U WATER-COOLED TILT TYPE ELECTROMAGNETIC CHUCK

Grinding

Environmentally friendly

Water cooled

KCT-1535UF

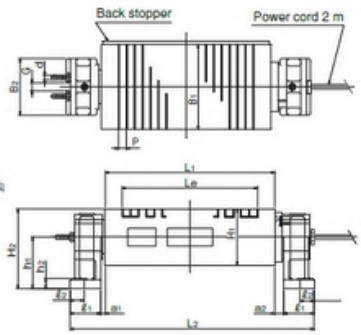

[Application]
Suitable for high precision angle grinding.

[Features]
- Cooling water flows inside the chuck, but KANETEC' s original design protects the internal coils from damage.
- Since the cooling hose is connected to the shaft, a desired tilting range can be set.
- The hose does not become an obstacle regardless of tilting angles of the work face. Grinding at a tilted angle can be carried out without paying attention to the hose location.
- The tilting angle can be set as desired in a range of 90 ° forward and 90° backward.
- Cooling water is let flow inside the chuck to cool the coils directly and grinding fluid cools the top surface to provide a high cooling effect to minimize temperature rise. This design thus minimizes accuracy change of the chuck.
- A resin-bonded structural face plate having little environmental burden is employed.

Chuck controller required additionally

[mm (in)]

Model	Nominal Size	Work Face B_1	Work Face L_1	Work Face Le	Work Face H_1	Pole Pitch P	Tilt Base B_2	Tilt Base ℓ_1	Tilt Base ℓ_2	Tilt Base G	Tilt Base h_1	Tilt Base h_2	Tilt Base a_1	Tilt Base a_2	Length L_2	Height H_2	Hose Coupling	Voltage	Current	Mass	Electro Chuck Master	Remarks
KCT-1025UF	100(3.93)×250(9.84)	100(3.93)	250(9.84)	211(8.30)	100 (3.93)	11(2+9) (0.43)	95 (3.74)	54 (2.12)	25 (0.98)	14 (0.55)	75 (2.95)	16 (0.63)	8 (0.31)	16 (0.62)	382(15.0)	125 (4.92)	φ8 (0.31)	90 VDC	0.16A	21kg/ 46 lb	ES-M103C ES-M305C EH-V305B EH-VE305B	※For types with a combination of a rectifier and demagnetizer, see pages of "Chuck Controllers." P54–P58
KCT-1030UF	100(3.93)×300(11.8)		300(11.8)	255(10.0)											432(17.0)				0.21A	23kg/ 50 lb		
KCT-1040UF	100(3.93)×400(15.7)		400(15.7)	365(14.3)											532(20.9)				0.26A	30kg/ 66 lb		
KCT-1230UF	120(4.72)×300(11.8)	120(4.72)	300(11.8)	240(9.44)		14(2+12) (0.55)	100 (3.93)				91 (3.58)	18 (0.70)			432(17.0)	141 (5.55)			0.21A	29kg/ 64 lb		
KCT-1530UF	150(5.90)×300(11.8)	150(5.90)																	0.20A	37kg/ 81 lb		
KCT-1535UF	150(5.90)×350(13.7)		350(13.7)	296(11.6)											482(18.9)				0.22A	41kg/ 90 lb		
KCT-1545UF	150(5.90)×450(17.7)		450(17.7)	408(16.0)											582(22.9)				0.29A	51kg/112 lb		
KCT-2050UF	200(7.87)×500(19.6)	200(7.87)	500(19.6)	464(18.2)			120 (4.72)	59 (2.32)		16 (0.62)	120 (4.72)	20 (0.78)			642(25.2)	170 (6.69)			0.34A	76kg/167 lb		
KCT-2060UF	200(7.87)×600(23.6)		600(23.6)	548(21.5)											742(29.2)				0.47A	89kg/196 lb		

※If the magnetic force needs not be adjusted, use ES-M. ※A cooler unit is required additionally.
※The chuck controller and clamp parts are not included. The KANETEC chucks work best when a KANETEC chuck controller is used.

Model KEZ-H ELECTROMAGNETIC CHUCK WITH HARD ATTRACTIVE FACE

Grinding

Environmentally friendly

KEZ-H1138UF

Chuck controller required additionally

[Application]
Suitable for grinding inclined faces of jigs/fixtures and metal molds.

[Features]
- An electromagnetic chuck with a hardened attractive face.The face plate is less susceptible to damage and the frequency of self-grinding can be reduced. Also for self-grinding, the grinding wheel needs not be replaced, thus shortening the setup time.
- A resin-bonded structural face plate having little environmental burden is employed.

※The chuck controller and clamp parts are not included.
The maximum performance can be obtained by using the Chuck Master Model EH-V.

Model KET-UTS LARGE CONNECTING TILT TYPE ELECTROMAGNETIC CHUCK

Grinding

Environmentally friendly

Chuck controller required additionally

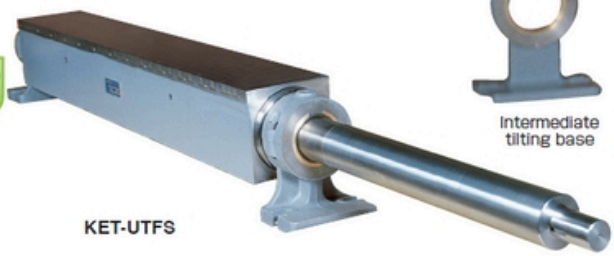

KET-UTFS

Intermediate tilting base

[Application]

This model is used with grinders of wood slice cutters and most suitable for angle grinding of edges. It can also be used for uniform grinding in the longitudinal direction.

[Features]

- As a connecting type, this model consists of a main unit, lead shaft, intermediate shaft, tilting shaft, tilting base and intermediate tilting base. When one unit is used, it is used as shown in Fig. 2 and when three units are used, they are connected as shown in Fig. 1.
- As the tilting torque is large, the shaft has been made long to increase the reduction ratio on your machine side. (The scaled ring and tilting device are not included. Provide them on your machine side.)
- The chuck-to-chuck connecting clearance is as small as 40 mm.
- A resin-bonded structural face plate having little environmental burden is employed.

Fig. 1

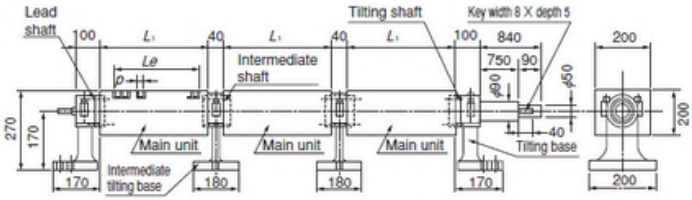

(The above figure shows 3 standard units connected.)

Fig. 2

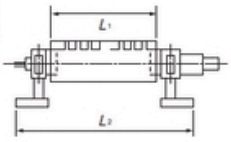

〈When ordering〉

If you want to connect units as shown in Fig. 1, please order the number of main units to be connected

An example of mounting

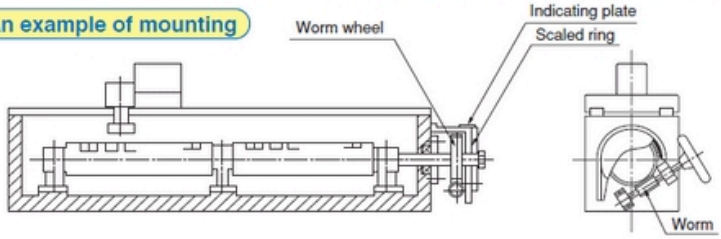

[mm (in)]

Model	Nominal Size	Work Face L_1	Work Face L_e	Pole pitch P	Length L_2	Voltage	Current	Mass	Electro Chuck Master	Remarks
KET-20100UTFS	200 (7.87) × 1000 (39.3)	1000 (39.3)	920 (36.2)	28 (4+24) (1.10) ※Pitch varies according to places.	1340 (52.7)	90 VDC	0.72A	Approx.305kg/ 672 lb	ES-M103C ES-M305C EH-V305B EH-VE305B	※For types with a combination of a rectifier and demagnetizer, see pages of "Chuck Controllers." P54~P58
KET-20120UTFS	200 (7.87) × 1200 (47.2)	1200 (47.2)	1120 (44.0)		1540 (60.6)		0.90A	Approx.355kg/ 782 lb		
KET-20140UTFS	200 (7.87) × 1400 (55.1)	1400 (55.1)	1320 (51.9)		1740 (68.5)		1.00A	Approx.400kg/ 881 lb		
KET-20150UTFS	200 (7.87) × 1500 (59.0)	1500 (59.0)	1420 (55.9)		1840 (72.4)		1.25A	Approx.430kg/ 948 lb		
KET-20160UTJFS	200 (7.87) × 1600 (62.9)	1600 (62.9)	1520 (59.8)		1940 (76.3)		1.35A	Approx.445kg/ 981 lb		
KET-20170UTJFS	200 (7.87) × 1700 (66.9)	1700 (66.9)	1620 (63.7)		2040 (80.3)		1.33A	Approx.465kg/1025 lb		

※The chuck controllers in this table are for single unit and when two or more units are connected, use "current × number of units connected" to select a suitable model.
※If the magnetic force needs not be adjusted, use ES-M. ※The chuck controller and clamp parts are not included. The KANETEC chucks work best when a KANETEC chuck controller is used.
※The above models include the main unit, right/left tilting bases, lead shaft and tilting shaft.
※The face plate of KET-UTJFS types is of split construction and no magnetic force may be generated in the center part.

Model RMT-U TILT TYPE PERMANENT MAGNETIC CHUCK

Grinding

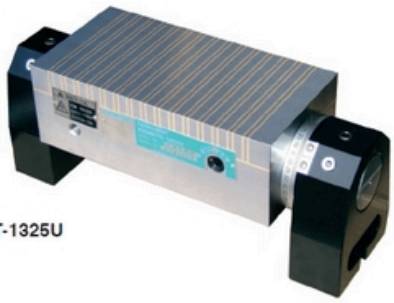

RMT-1325U

[Application]

Suitable for angle grinding on grinders. The strong holding power enables angle grinding of various workpieces regardless of whether they are thin, small or thick.

[Features]

- The rotary shaft with scale facilitates angle setting. (An angle can be set as desired between 90° forward and 90° backward)
- Easy installation and highly precise operations.

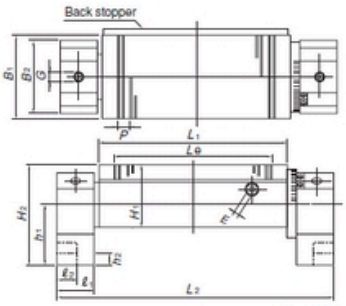

[mm (in)]

Model	Nominal Size	Work Face B_1	Work Face L_1	Work Face Le	Work Face H_1	Pole Pitch P	Tilt Base B_2	Tilt Base ℓ_1	Tilt Base ℓ_2	Tilt Base G	Tilt Base h_1	Tilt Base h	Length L_2	Height H_2	Handle Hole E	Mass
RMT- 713U	70 (2.75) × 130 (5.11)	70 (2.75)	130 (5.11)	91 (3.58)	66 (2.59)	14.5 (1.5+3.2+1.5+8.3) (0.57)	70 (2.75)	40 (1.57)	24 (0.94)	14 (0.55)	55 (2.16)	10 (0.39)	225 (8.85)	101 (3.97)	Hex. 8 (0.31)	8kg/ 17 lb
RMT-1018U	100 (3.93) × 175 (6.89)	100 (3.93)	175 (6.89)	137 (5.39)	86 (3.38)		100 (3.93)	50 (1.96)	29 (1.14)		80 (3.15)	15 (0.59)	290 (11.4)	136 (5.35)		20kg/ 44 lb
RMT-1025U	100 (3.93) × 250 (9.84)		250 (9.84)	210 (8.26)									365 (14.3)			25kg/ 55 lb
RMT-1030U	100 (3.93) × 300 (11.8)		300 (11.8)	253 (9.96)									415 (16.3)			29kg/ 64 lb
RMT-1325U	125 (4.92) × 250 (9.84)	125 (4.92)	250 (9.84)	210 (8.26)							95 (3.74)		365 (14.3)	151 (5.94)		29kg/ 64 lb
RMT-1530U	150 (5.90) × 300 (11.8)	150 (5.90)	300 (11.8)	253 (9.96)									415 (16.3)			37kg/ 82 lb
RMT-1535U	150 (5.90) × 350 (13.7)		350 (13.7)	296 (11.6)									465 (18.3)			40kg/ 88 lb
RMT-1545U	150 (5.90) × 450 (17.7)		450 (17.7)	398 (15.6)									565 (22.2)			49kg/108 lb

※As for the handle, a hex wrench key is included. ※Larger sizes are available also. ※The scaled ring can be used to set an angle roughly. When it is necessary to set the angle accurately, use a sine bar or other suitable device. Note that when it is tilted forward, the ON-OFF operation will become difficult.

Model RMA-U TILT TYPE POWERFUL PERMANENT MAGNETIC CHUCK

Greatest holding power in KANETEC tilt type permanent magnetic chucks!

Grinding Cutting

RMA-1545U

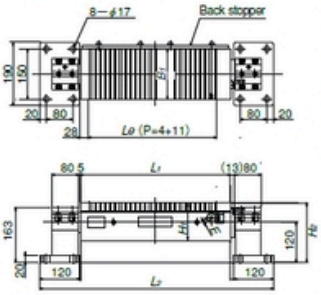

An example of machining

[Application]
Suitable for heavy duty grinding of inclined surfaces and light duty cutting.

[Features]
- The strong holding power enables inclined cutting.
- A drop in magnetic force due to air gaps is minimal to make this type suitable for cutting of mill scale steel.
- The tilting angle can be set as desired in a range of 90° forward and 90° backward.
- A 200-mm wide type is also available.

[mm (in)]

Model	Nominal Size	Work Face B_1	Work Face L_1	Work Face Le	Work Face H_1	Length L_2	Height H_2	Handle Hole E	Mass
RMA-1530U	150 (5.90) × 300 (11.8)	150 (5.90)	300 (11.8)	229 (9.01)	112 (4.40)	552 (21.7)	177 (6.96)	Hex. 8 (0.31)	66kg/ 145 lb
RMA-1545U	150 (5.90) × 450 (17.7)		450 (17.7)	379 (14.9)		702 (27.6)			79kg/ 174 lb
RMA-2050U	200 (7.87) × 500 (19.6)	200 (7.87)	500 (19.6)	424 (16.6)		752 (29.6)		Hex.10 (0.39)	108kg/ 238 lb
RMA-2060U	200 (7.87) × 600 (23.6)		600 (23.6)	529 (20.8)		852 (33.5)			125kg/ 275 lb

※The ratchet handle (with socket) is included.
※The scaled ring can be used to set an angle roughly. When it is necessary to set the angle accurately, use a sine bar or other suitable device. Note that when it is tilted forward, the ON-OFF operation will become difficult.

Model EP-DM-U TILT TYPE POWERFUL PERMANENT ELECTROMAGNETIC CHUCK

Equipped with both strong holding power and good demagnetizing performance!

Grinding Cutting Power saving Minimal heat generation

Chuck controller required additionally

Environmentally friendly

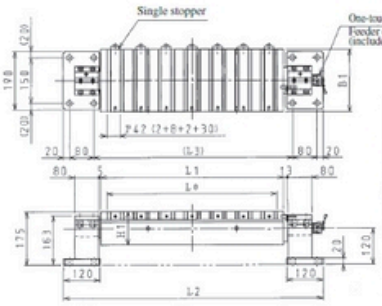

[Application]
Suitable for heavy-duty grinding and light-duty cutting of inclined surfaces.

[Features]
- The strong holding power enables inclined cutting.
- The tilting angle can be set as desired in a range of 90° forward and 90° backward.
- The coil dedicated to demagnetization improves the workpiece release performance when the chuck is turned off.
- The employment of a one-touch connector facilitates connection and disconnection of the cord.
- This chuck has the holding power equivalent to that of the permanent magnetic chuck RMA and good demagnetization performance close to the electromagnetic chuck KETN.

[mm (in)]

Model	Nominal Size	Work Face B_1	Work Face L_1	Work Face Le	Work Face H_1	Tilt Base L_3	Length L_2	Mass	Electro Chuck Master
EP-DM1535U	150 (5.90) × 350 (13.7)	155 (6.10)	350 (13.7)	306 (12.0)	110 (4.33)	402 (15.8)	602 (23.7)	Approx. 65kg/ 143 lb	EPS-D2100B P54–P55
EP-DM1543U	150 (5.90) × 430 (16.9)		430 (16.9)	390 (15.3)		482 (18.9)	682 (26.8)	Approx. 70kg/ 154 lb	
EP-DM2052U	200 (7.87) × 520 (20.4)	205 (8.07)	520 (20.4)	474 (18.6)		572 (22.5)	772 (30.3)	Approx.110kg/ 242 lb	
EP-DM2060U	200 (7.87) × 600 (23.6)		600 (23.6)	558 (21.9)		652 (25.6)	852 (33.5)	Approx.120kg/ 264 lb	

※The Electro Chuck Master and clamping parts are not included.
※The best performance can be obtained when KANETEC's electrical equipment is used with KANETEC chucks.
※Turning the permanent electromagnetic chucks on and off must be limited to once per several minutes. If on/off operations are repeated frequently, the chucks may be damaged by overheat.

Model EPZ-U TILT TYPE PERMANENT ELECTROMAGNETIC CHUCK

Grinding

Environmentally friendly

Power saving Minimal heat generation

Chuck controller required additionally

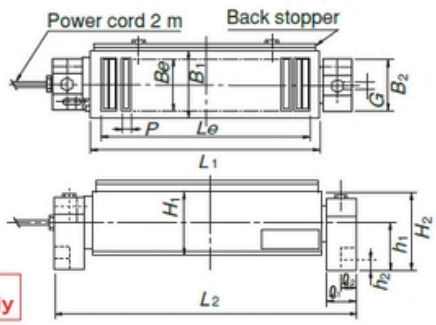

[Application]
Suitable for angle grinding on grinders. Easy to install.

[Features]
- The rotary shaft with scale facilitates angle setting. (An angle can be set as desired in a range of 90° forward and 90° backward.)
- Since electricity is supplied momentarily only to control the magnetomotive force when mounting/demounting a workpiece, little heat is generated internally to enable highly precise machining.
- Since electricity needs not be supplied continuously even while holding a workpiece, the running cost is very low.
- Since the holding power is maintained in the event of power failure and cable breakage, safety is secured.
- A resin-bonded structural face plate having little environmental burden is employed.

[mm (in)]

Model	Nominal Size	Work Face B_1	Work Face L_1	Work Face Be	Work Face Le	Work Face H_1	Pole Pitch P	Tilt Base B_2	Tilt Base ℓ_1	Tilt Base ℓ_2	Tilt Base G	Tilt Base h_1	Tilt Base h_2	Length L_2	Height H_2	Voltage	Mass	Electro Chuck Master
EPZ-1025UF	100 (3.93) × 250 (9.84)	100 (3.93)	250 (9.84)	78 (3.07)	211 (8.30)	100 (3.93)	11 (2+9) 0.43 (0.07+0.35)	100 (3.93)	50 (1.96)	29 (1.14)	14 (0.55)	80 (3.15)	15 (0.59)	368 (14.4)	130 (5.11)	90 VDC	22kg/ 48 lb	EPS-215B P54–P55
EPZ-1030UF	100 (3.93) × 300 (11.8)				255 (10.0)												24kg/ 52 lb	
EPZ-1230UF	120 (4.72) × 300 (11.8)	120 (4.72)	300 (11.8)	96 (3.78)	240 (9.44)		14 (2+12) 0.55 (0.07+0.47)					95 (3.74)		418 (16.4)			30kg/ 66 lb	
EPZ-1530UF	150 (5.90) × 300 (11.8)	150 (5.90)		120 (4.72)											145 (5.70)		37kg/ 81 lb	
EPZ-1545UF	150 (5.90) × 450 (17.7)		450 (17.7)		408 (16.0)									568 (22.3)			52kg/ 114 lb	

※The chuck controller and clamp parts are not included. ※The KANETEC chucks work best when a KANETEC chuck controller is used.
※Turning the permanent electromagnetic chucks on and off must be limited to once per several minutes. If on/off operations are repeated frequently, the chucks may be damaged by overheat.

Types of Sine Bar Chucks

The sine bar chucks are used to set accurate angles of workpieces for highly precise grinding or as an inspection fixture. This is a type of chuck that utilizes angle setting by a sine bar and the chuck work face can be set to a desired angle efficiently.

■Feature

The sine bar chucks come in various types such as electromagnetic, water-cooled, permanent electromagnetic, permanent magnetic and in various sizes.

Type	Model	Features	Remarks
Tilt electromagnetic	SBE-U	Dust cover provided on gauge block	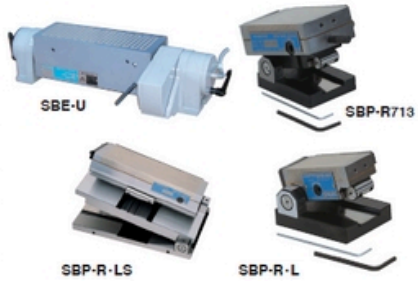
Tilt water-cooled electromagnetic	SBC-U	High precision water-cooled type	
Tilt permanent electromagnetic	SBEP-U	Momentary power application for minimized heat generation	
Tilt permanent magnetic	SBP-U	Dust cover provided on gauge block	
Sine bar chuck compound type	SBP-R·LS	Thin compound type	
Sine bar chuck single type	SBP-R·S	Thin single type	
	SBP-R·L	Tilting in longitudinal direction	

※The rotary tilting sine bar chuck comes with a gauge block (for 0° setting) of 25.882 mm of JIS Class B.

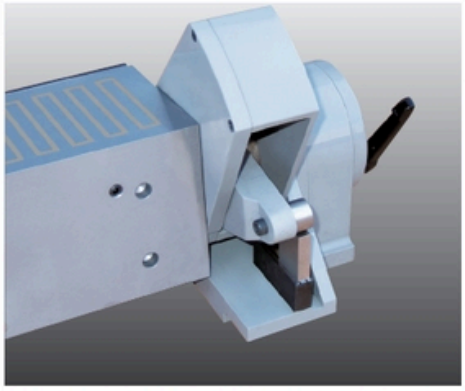

Gauge block setting location on the right side (photo): R type, and on the left side: L type.

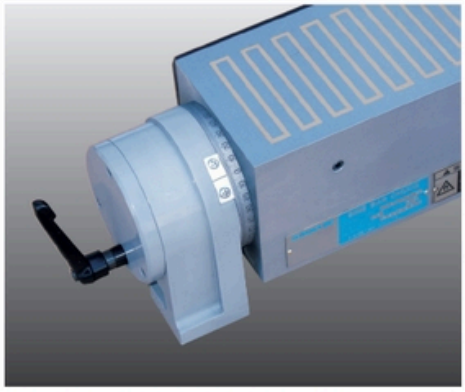

The lock lever is installed on both sides.

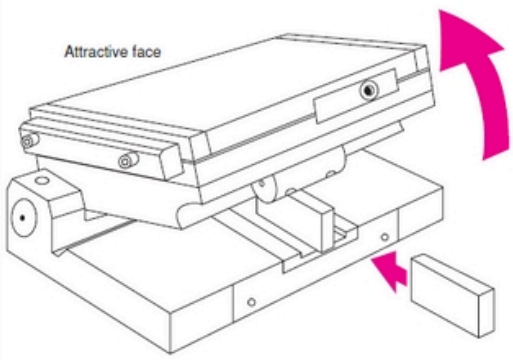

■Mechanism of Angle Setting by Sine Bar Chuck

A gauge block is used for setting the angle.

An angle is obtained by the trigonometric function using the gauge block dimension as the vertical side (a) and the roller center distance (from the center of open/close fulcrum shaft to the center of reference bar on the open/close side) as the hypotenuse (c), as shown.

$$\sin\theta^\circ = \frac{a}{c}$$

Select an approximate value from the function table for θ°.

When using a certain angle repeatedly, a method is available which uses a special master gauge made to the dimension "a," which determines an angle, obtained from the function table in advance.

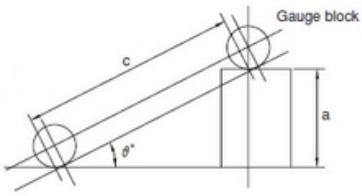

Model SBE-U TILT TYPE ELECTROMAGNETIC SINE BAR CHUCK

Grinding

Environmentally friendly

Chuck controller required additionally

SBE-1131UFR-C

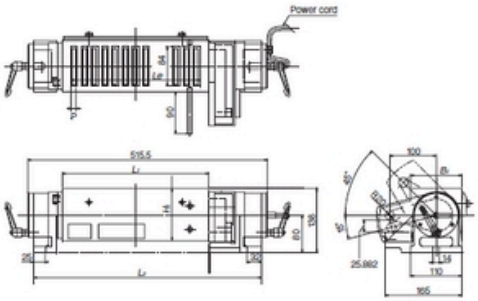

[Application]
Suitable for high precision angle grinding of molds and jigs.

[Features]
- The gauge block can be set on either the right side (R) or left side (L) to meet the rotating direction of the grinding wheel of the grinder.
- The chuck can be smoothly tilted and easily operated.
- An angle can be set finely by one try with the clamp system.
- The position can be changed and secured by pulling the lever in the axial direction.
- When the dustproof cover of the gauge block is opened beyond about 60 degrees, it is locked to facilitate setup and cleaning.
- A resin-bonded structural face plate having little environmental burden is employed.

[mm (in)]

Model	Nominal Size	Work Face				Pole Pitch	Mounting Length	Height		Tilt Angle	Angle Accuracy	Voltage	Current	Mass	Electro Chuck Master	Remarks
		B_1	L_1	Le	H_1	P	L_2	Angle 0°, Min.	Cover fully open, Max.							
SBE-1131UFR-C SBE-1131UFL-C	110 (4.33) × 315 (12.4)	110 (4.33)	315 (12.4)	278 (10.9)	113 (4.44)	11 (3+8) 0.43 (0.11+0.31)	492 (19.3)	138 (5.43)	210 (8.26)	−15° – +45°	0.007/100 max.	90 VDC	0.3A	36kg/ 79 lb	ES-M103C ES-M305C EH-V305B	※For types with a combination of a rectifier and demagnetizer, see pages of "Chuck Controllers." P54–P58

※The type having the gauge block setting area on the right side is indicated by "R" and that on the left side indicated by "L".
※The chuck controller and clamp parts are not included. The KANETEC chucks work best when a KANETEC chuck controller is used.
※A gauge block (25.882 mm) for 0° is included. For the mechanism of angle setting, see the bottom part on page 51. The conversion table included with the product facilitates angle setting.

Model SBC-U TILT TYPE WATER-COOLED ELECTROMAGNETIC SINE BAR CHUCK

Grinding

Environmentally friendly

Water cooled

Chuck controller required additionally

SBC-1131UFL-C

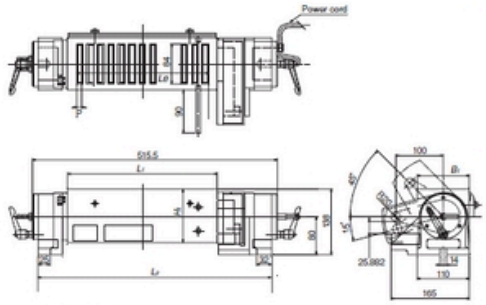

[Application]
Constructed to enable real-time internal cooling of heat generated when power is applied to the electromagnet, making these chucks suitable for higher precision grinding operation.

[Features]
- Change in accuracy is minimized by supplying coolant at a flow rate of 2 to 4 L/min to minimize coil heating.
- The mechanical functions and features are almost the same as those of Model SBE chucks.
- A resin-bonded structural face plate having little environmental burden is employed.

[mm (in)]

Model	Nominal Size	Work Face				Pole Pitch	Mounting Length	Height		Tilt Angle	Angle Accuracy	Voltage	Current	Mass	Electro Chuck Master	Remarks
		B_1	L_1	Le	H_1	P	L_2	Angle 0°, Min.	Cover fully open, Max.							
SBC-1131UFR-C SBC-1131UFL-C	110 (4.33) × 315 (12.4)	110 (4.33)	315 (12.4)	278 (10.9)	113 (4.44)	11 (3+8) 0.43 (0.11+0.31)	492 (19.3)	138 (5.43)	210 (8.26)	−15° – +45°	0.007/100 max.	90 VDC	0.3A	36kg/ 79 lb	ES-M103C ES-M305C EH-V305B	※For models with a combination of a rectifier and demagnetizer, see pages of "Chuck Controllers." P54–P58

※The type having the gauge block setting area on the right side is indicated by "R" and that on the left side indicated by "L". ※A cooler unit is required additionally.
※The chuck controller and clamp parts are not included. The KANETEC chucks work best when a KANETEC chuck controller is used.
※A gauge block (25.882 mm) for 0° is included. For the mechanism of angle setting, see the bottom part on page 51. The conversion table included with the product facilitates angle setting.

Model SBP-R·UR TILT TYPE PERMANENT MAGNETIC SINE BAR CHUCK

Grinding

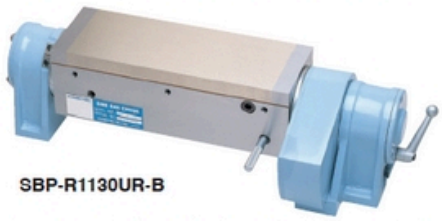

SBP-R1130UR-B

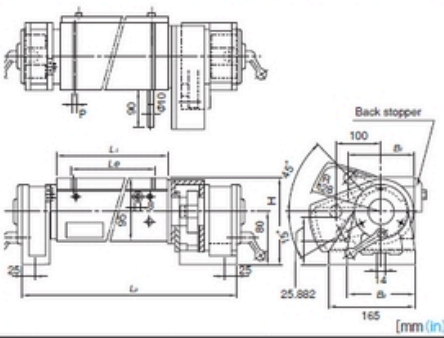

[Application]
Suitable for grinding molds and jigs including relatively small and thin ones that require high precision.

[Features]
- No electricity is needed, thus no heat is generated.
- The mechanical functions and features are almost the same as those of Model SBE.

[mm (in)]

Model	Nominal Size	Work Face			Pole Pitch	Mounting Face		Height	Height at Max. Tilt	Tilt Angle	Angle Accuracy	Mass
		B_1	L_1	Le	P	B_2	L_2	H				
SBP-R1130UR-B	105 (4.13) × 300 (11.8)	105 (4.13)	300 (11.8)	256 (10.0)	3 (1+2) 0.11 (0.03+0.07)	110 (4.33)	477 (18.7)	135 (5.31)	210 (8.26)	−15° – +45°	0.007/100 max.	35kg/77 lb

※A gauge block (25.882 mm) for 0° is included. For the mechanism of angle setting, see the bottom part on page 51. The conversion table included with the product facilitates angle setting.

Model SBP-R·LS COMPOUND TYPE PERMANENT MAGNETIC SINE BAR CHUCK

W type

Grinding

SBP-R1530LS-A

Gauge block not included.

[Application]
Permanent magnetic chucks to enable highly accurate composite inclination on the X axis and Y axis.

[Features]
- ●When one side is closed, the chuck acts as a single vertical or horizontal type.
- ●The whole sine bar part is made of special steel, which has been precisely ground after hardening.
- ●The major parts have been lapped to ensure highly precise grinding and measurement over a long period of time.
- ●Since a thin permanent magnetic chuck is used, this model is easy to handle and provides a wider machining space.
- ●These chucks employ a permanent magnet and therefore no heat is generated, which enables highly precise grinding.

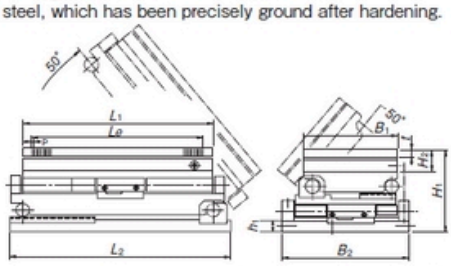

[mm (in)]

Model	Nominal Size	Work Face B_1	Work Face L_1	Work Face t	Work Face Le	Pole Pitch P	Mounting Face B_2	Mounting Face L_2	Mounting Face H_1	Height H_1	Height H_2	Height at Max. Tilt	Tilt Angle	Angle Accuracy	Roller Center Distance	Mass
SBP-R1018LS-A	105 (4.13) × 175 (6.89)	105 (4.13)	175 (6.89)	18 (0.70)	143 (5.63)	3(1+2) 0.11 (0.03+0.07)	166 (6.53)	200 (7.87)	22 (0.86)	129 (5.07)	40 (1.57)	(248) (9.76)	0° -50° Accuracy guaranteed range 0° -45°	0.007/100 max.	Upper 75 (2.95) Lower150 (5.90)	18kg/ 39 lb
SBP-R1325LS-A	130 (5.11) × 250 (9.84)	130 (5.11)	250 (9.84)		209 (8.22)		186 (7.32)	300 (11.8)		130 (5.11)		(323) (12.7)			Upper100 (3.93) Lower250 (9.84)	35kg/ 77 lb
SBP-R1515LS-A	150 (5.90) × 150 (5.90)	150 (5.90)	150 (5.90)		119 (4.68)		200 (7.87)	210 (8.26)				(264) (10.3)			Upper125 (4.92) Lower150 (5.90)	25kg/ 55 lb
SBP-R1530LS-A	150 (5.90) × 300 (11.8)		300 (11.8)		257 (10.1)		206 (8.10)	345 (13.5)	345 (13.5)			(372) (14.6)			Upper125 (4.92) Lower300 (11.8)	45kg/ 99 lb

※A hex wrench key is included. For the mechanism of angle setting, see the bottom part on page 51. The conversion table included with the product facilitates angle setting.

Model SBP-R·S SINGLE TYPE PERMANENT MAGNETIC SINE BAR CHUCK

S type

Grinding

SBP-R1018S-B

Gauge block not included.

[Application]
A laterally long type with the long side as the tilting axis for highly precise grinding and measurement.

[Features]
- ●A flat type as thin as 89 mm to 100 mm for a wide range of applications. With a thin permanent magnetic chuck mounted, this single type has been precisely finished to 0.007 mm or better.
- ●The whole sine bar part is made of special steel, which has been precisely ground after hardening.
- ●The major parts have been lapped to ensure highly precise grinding and measurement over a long period of time.
- ●Since a thin permanent magnetic chuck is used, this model is easy to handle and provides a wider machining space.
- ●These chucks employ a permanent magnet and therefore no heat is generated, which enables highly precise grinding.

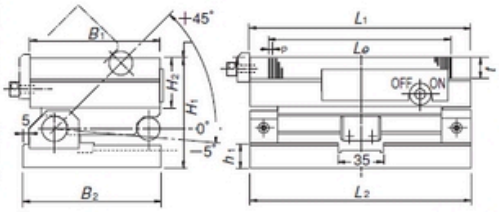

[mm (in)]

Model	Nominal Size	Work Face B_1	Work Face L_1	Work Face t	Work Face Le	Pole Pitch P	Mounting Face B_2	Mounting Face L_2	Mounting Face h_1	Height H_1	Height H_2	Height at Max. Tilt	Tilt Angle	Angle Accuracy	Roller Center Distance	Mass
SBP-R1018S-B	105 (41.3) × 175 (6.89)	105 (4.13)	175 (6.89)	18 (0.70)	142 (5.59)	3(1+2) 0.11 (0.03+0.07)	110 (4.33)	175 (6.89)	20 (0.78)	89 (3.50)	40 (1.57)	(117) (4.60)	−5° -45°	0.007/100 max.	75 (2.95)	9kg/ 20 lb
SBP-R1530S-B	150 (5.90) × 300 (11.8)	150 (5.90)	300 (11.8)		256 (10.0)		160 (6.29)	300 (11.8)	27 (1.06)	96 (3.78)		(172) (6.77)			125 (4.92)	27kg/ 60 lb
SBP-R1545S-B	150 (5.90) × 450 (17.7)		450 (17.7)		394 (15.5)			450 (17.7)	31 (1.22)	100 (3.93)						48kg/ 106 lb

※A hex wrench key is included. For the mechanism of angle setting, see the bottom part on page 51. The conversion table included with the product facilitates angle setting.

Model SBP-R·L SINGLE TYPE PERMANENT MAGNETIC SINE BAR CHUCK

L type

Grinding

SBP-R1018L-B

Gauge block not included.

[Application]
A longitudinally long type with the short side as the tilting axis for highly precise grinding and measurement. Suitable for highly precise angle grinding on mold grinders, etc.

[Features]
- ●A grip is provided to facilitate angle setting in the longitudinal direction.

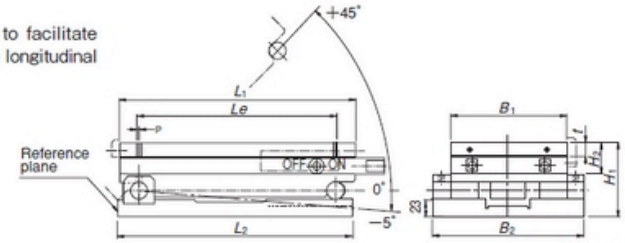

[mm (in)]

Model	Nominal Size	Work Face B_1	Work Face L_1	Work Face t	Work Face Le	Pole Pitch P	Mounting Face B_2	Mounting Face L_2	Height H_1	Height H_2	Height at Max. Tilt	Tilt Angle	Angle Accuracy	Roller Center Distance	Mass
SBP-R1018L-B	105 (4.13) × 175 (6.89)	105 (4.13)	175 (6.89)	18 (0.70)	142 (5.59)	3(1+2) 0.11 (0.03+0.07)	151 (5.94)	175 (6.89)	89 (3.50)	40 (1.57)	(175.5) (6.90)	−5° -45°	0.007/100 max.	125 (4.92)	11kg/ 24 lb
SBP-R1530L-B	150 (5.90) × 300 (11.8)	150 (5.90)	300 (11.8)		256 (10.0)		196 (7.71)	300 (11.8)	103 (4.05)		(272) (10.7)			250 (9.84)	32kg/ 71 lb

※The tilting base setscrews are 6 mm wide across flats. A hex wrench key is included. For the mechanism of angle setting, see the bottom part on page 51. The conversion table included with the product facilitates angle setting.